Drying Tumblers

20, 30, 50 and 75 Pound Capacities

Refer to Page 3 for Model Numbers

Parts

Alliance Laundry Systems

www.comlaundry.com

Part No. D0287R2
October 2011

Table of Contents

Title	Page
Parts Ordering Information	2
Serial Plate Location	2
Model Identification	3
Cabinet Front and Dust Filter	4
Thermostat	6
Thermostat Hygrometer	8
Top Front Panel	10
Middle Front Panel	12
Door	14
Door Assembly	16
Lower Front Panel	18
Operating Door - DX3 and DX3R OPL Models	20
Operating Door - DX3S and DX3RS OPL Models	22
Operating Door - DX3 and DX3R Coin Models	24
Operating Door - DX3S and DX3RS Coin Models	26
Operating Door - PRO OPL Models	28
Operating Door - PRO/HC OPL Models without Plugs	30
Operating Door - PRO/HC OPL Models with Plugs	32
Drum - DR20 Models	34
Drum - DR30 Models	36
Drum - DR50 and DR75 Models	38
Cabinet Back	40
Airflow Switch Assembly	42
Drum Drive - DR20 Models	44
Drum Drive - DR30 Models	46
Drum Drive - DR50 and DR75 Models	48
Drum Drive and Reduction - DR20 and DR30 Models	50
Drum Drive and Reduction	52
Motor, Fan and Drum Drive - DR20 and DR30 Models	54
Motor, Fan and Drum Drive	56
Motor Fan	58
Motor Drive	60
Electric Junction Box (Drawing 1 of 2)	62
Electric Junction Box (Drawing 2 of 2)	64
Gas Heating System - DR20 and DR30 Models	66
Gas Heating System - DR50 and DR75 Models	68
Electric Heating System	70
Steam Heating System	72
Parts Index	75

© Copyright 2011, Alliance Laundry Systems LLC

All rights reserved. No part of the contents of this book may be reproduced or transmitted in any form or by any means without the expressed written consent of the publisher.

Parts Ordering Information

If literature or replacement parts are required, contact the source from whom the machine was purchased or contact Alliance Laundry Systems at (920) 748-3950 for the name and address of the nearest authorized parts distributor.

For technical assistance, call either of the numbers listed below:

(920) 748-3121 Ripon, Wisconsin

+32 56 41 20 54 Wevelgem, Belgium

Serial Plate Location

When calling or writing about your product, be sure to mention model and serial numbers. Model and serial numbers are located on serial plate(s).

© Copyright, Alliance Laundry Systems LLC – DO NOT COPY or TRANSMIT

Model Identification

Information in this manual is applicable to these tumbler models:

DR20
DR30
DR50
DR75

© Copyright, Alliance Laundry Systems LLC – DO NOT COPY or TRANSMIT

Cabinet Front and Dust Filter

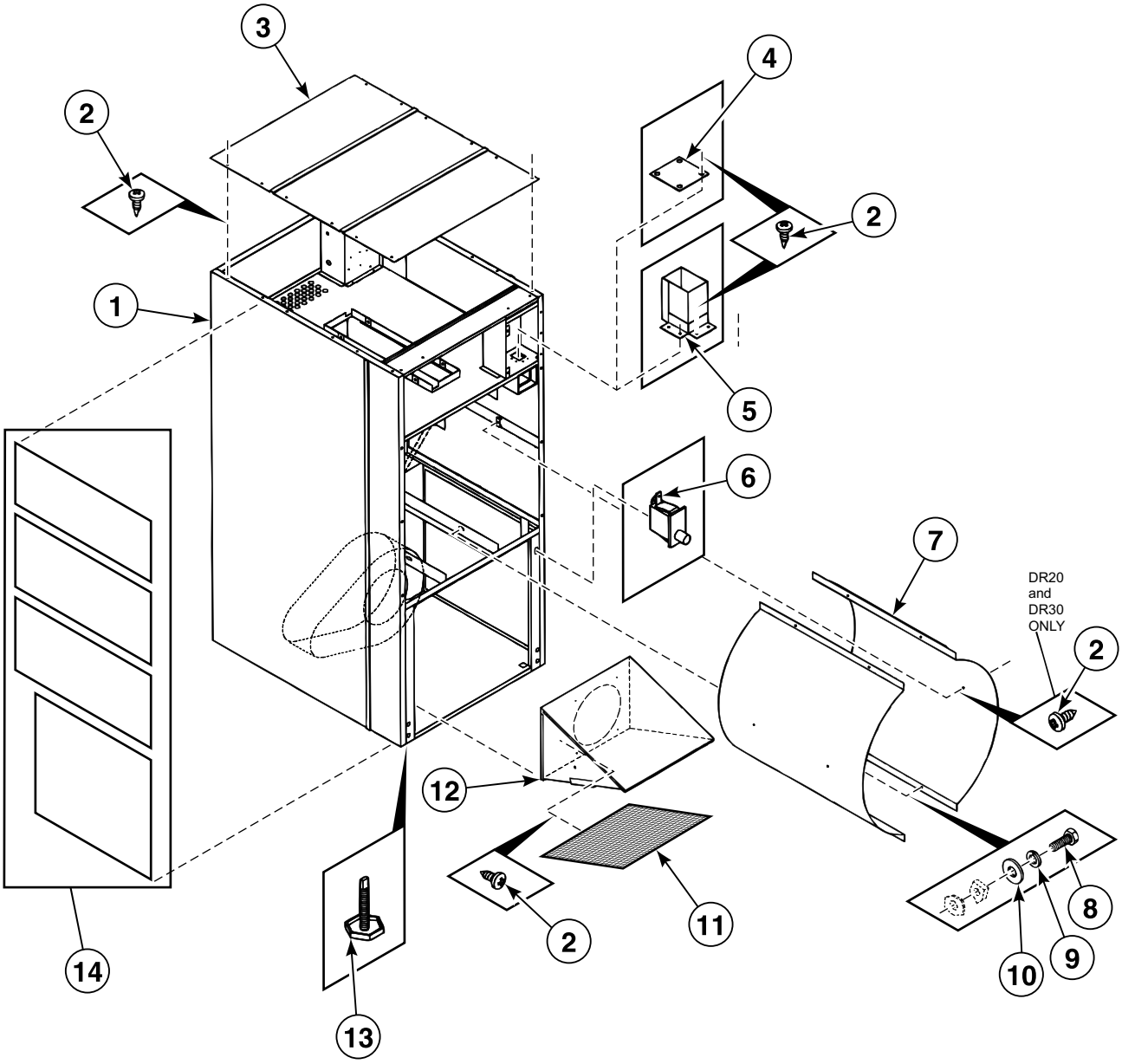

BE000182AP_D0287

© Copyright, Alliance Laundry Systems LLC – DO NOT COPY or TRANSMIT

Cabinet Front and Dust Filter

REF	PART NO.	DESCRIPTION	COMMENTS
1	254/CSA50/035	Side Panel	Model DR20
	254/CSA50/036	Side Panel	Model DR30
	254/CSA50/037	Frame and Side Panels	Model DR50; Gas and electric
	254/CSA50/050	Frame and Side Panels	Model DR50; Steam
	254/CSA50/045	Frame and Side Panels	Model DR75; Gas and electric
	254/CSA50/052	Frame and Side Panels	Model DR75; Steam
2	254/TU007/733	Screw	
3	254/CA011/925	Top Panel	Model DR20
	254/CA011/987	Top Panel	Model DR30
	254/CA012/073	Panel	Model DR50
	254/CA013/027	Panel	Model DR75
4	254/CA011/546	Cover Plate	Models DR50 and DR75
5	254/CSA01/435	Coin Box	
6	254/EA000/650	Microswitch	
7	254/CA013/047	Air Channel Drum	Model DR20
	254/CA011/991	Air Channel Drum	Model DR30
	254/CA013/083	Air Channel Drum	Model DR50; Steam
	254/CA013/026	Air Channel Drum	Model DR75; Gas and electric
	254/CA013/095	Air Channel Drum	Model DR75; Steam
	254/CA012/070	Air Channel Drum	Model DR50; Gas and electric
8	254/CB000/036	Bolt	
9	254/TU002/846	Washer	
10	254/TU002/847	Washer	
11	254/CSA00/839	Lint Filter	Models DR20, DR30 and DR50
	254/CSA00/817	Lint Filter	Model DR75
12	254/CSA01/528	Dust Filter	Models DR20, DR30 and DR50
	254/CSA01/545	Dust Filter	Model DR75
13	254/TU003/211	Leveling Leg	
14	254/CA011/956	Dust Filter	Model DR30
	254/CA011/931	Dust Filter	Model DR20
	254/CA011/955	Lower Drum	Model DR30
	254/CA011/934	Lower Drum	Model DR20
	254/CA011/933	Top Drum	Model DR30
	254/CA011/932	Top Drum	Model DR20
	254/CA011/764	Burner	Model DR30
	254/CA011/763	Burner	Model DR20
	254/CSA01/425	Complete Side Insulation	Model DR50
	254/CSA01/512	Complete Side Insulation	Model DR75

© Copyright, Alliance Laundry Systems LLC – DO NOT COPY or TRANSMIT

Thermostat

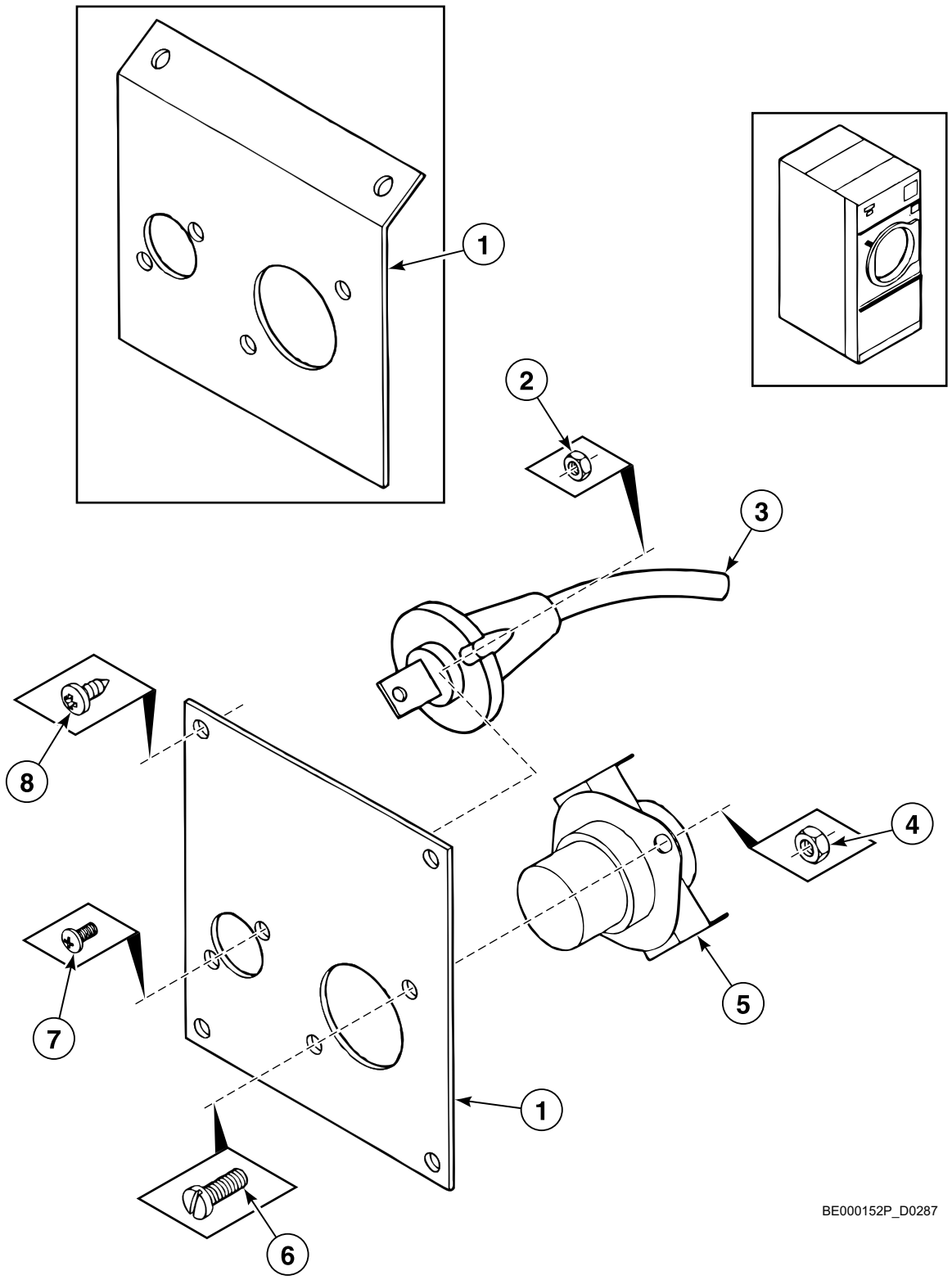

© Copyright, Alliance Laundry Systems LLC – DO NOT COPY or TRANSMIT

Thermostat

REF	PART NO.	DESCRIPTION	COMMENTS
1	254/CA013/067	Plate Assembly	
2	254/TU003/400	Nut	
3	254/00007/00	Temperature and Humidity Sensor	1700 mm
	254/00008/00	Temperature and Humidity Sensor	2000 mm
	254/00009/00	Temperature and Humidity Sensor	2300 mm
4	254/TU003/266	Nut	
5	254/EA000/594	Temperature Switch	
6	254/M0000/262	Screw	
7	254/SB000/952	Screw	
8	254/TU007/733	Screw	

© Copyright, Alliance Laundry Systems LLC – DO NOT COPY or TRANSMIT

Thermostat Hygrometer

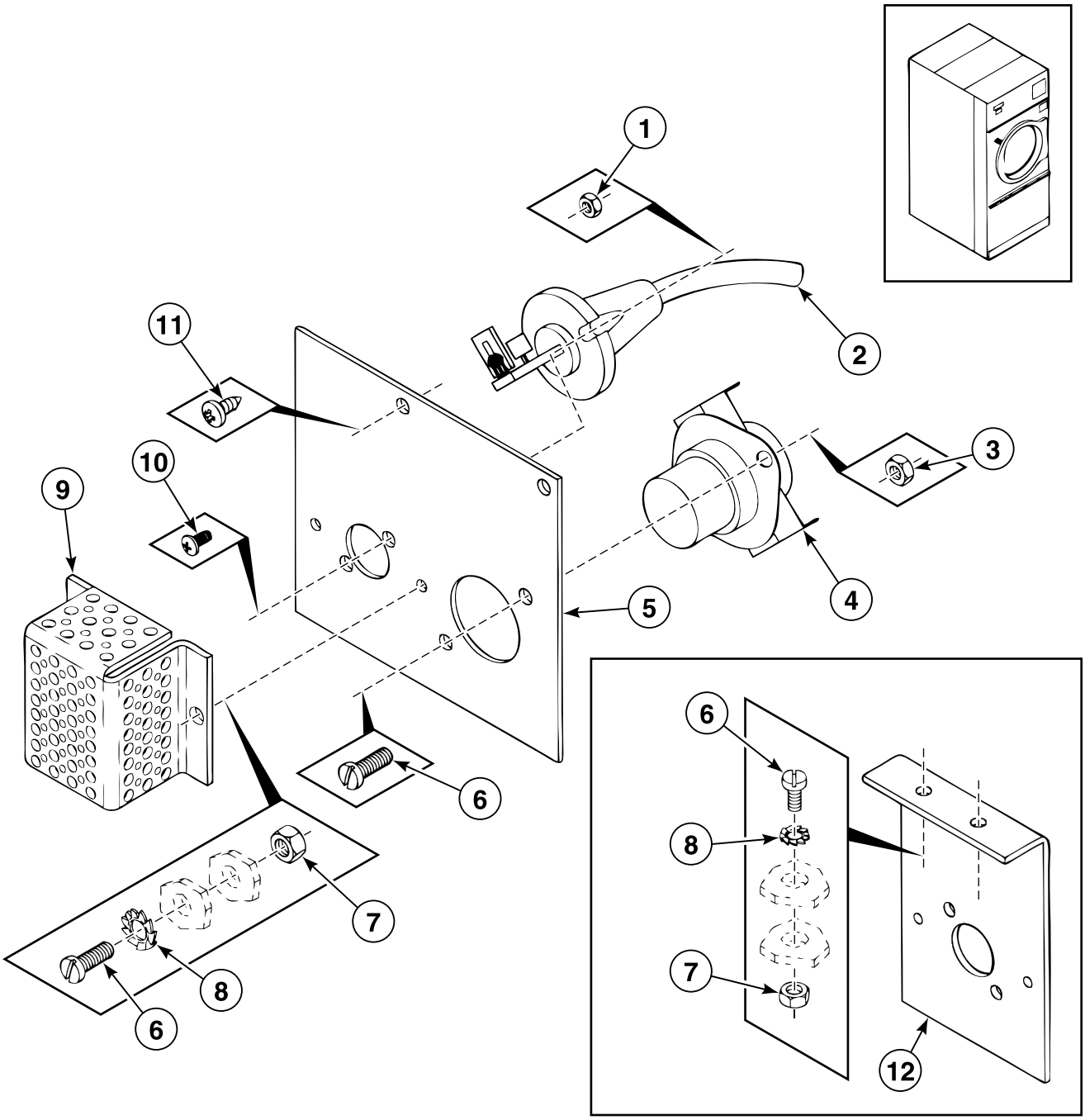

BE000150P_D0287

© Copyright, Alliance Laundry Systems LLC – DO NOT COPY or TRANSMIT

Thermostat Hygrometer

REF	PART NO.	DESCRIPTION	COMMENTS
1	254/TU003/400	Nut	
2	254/00058/00	Temperature and Humidity Sensor	1700 mm
	254/00059/00	Temperature and Humidity Sensor	2000 mm
	254/00071/10	Temperature and Humidity Sensor	2300 mm
3	254/TU003/266	Nut	
4	254/EA000/594	Temperature Switch	
5	254/00062/00	Plate Assembly	
6	207/0004/00	Screw	
7	204/0007/00	Nut	
8	203/00006/00	Washer	
9	254/00063/00	Thermostat/Hygrometer Protection	
10	254/SB000/952	Screw	
11	254/TU007/733	Screw	
12	254/00061/00	Top Plate Assembly	

© Copyright, Alliance Laundry Systems LLC – DO NOT COPY or TRANSMIT

Top Front Panel

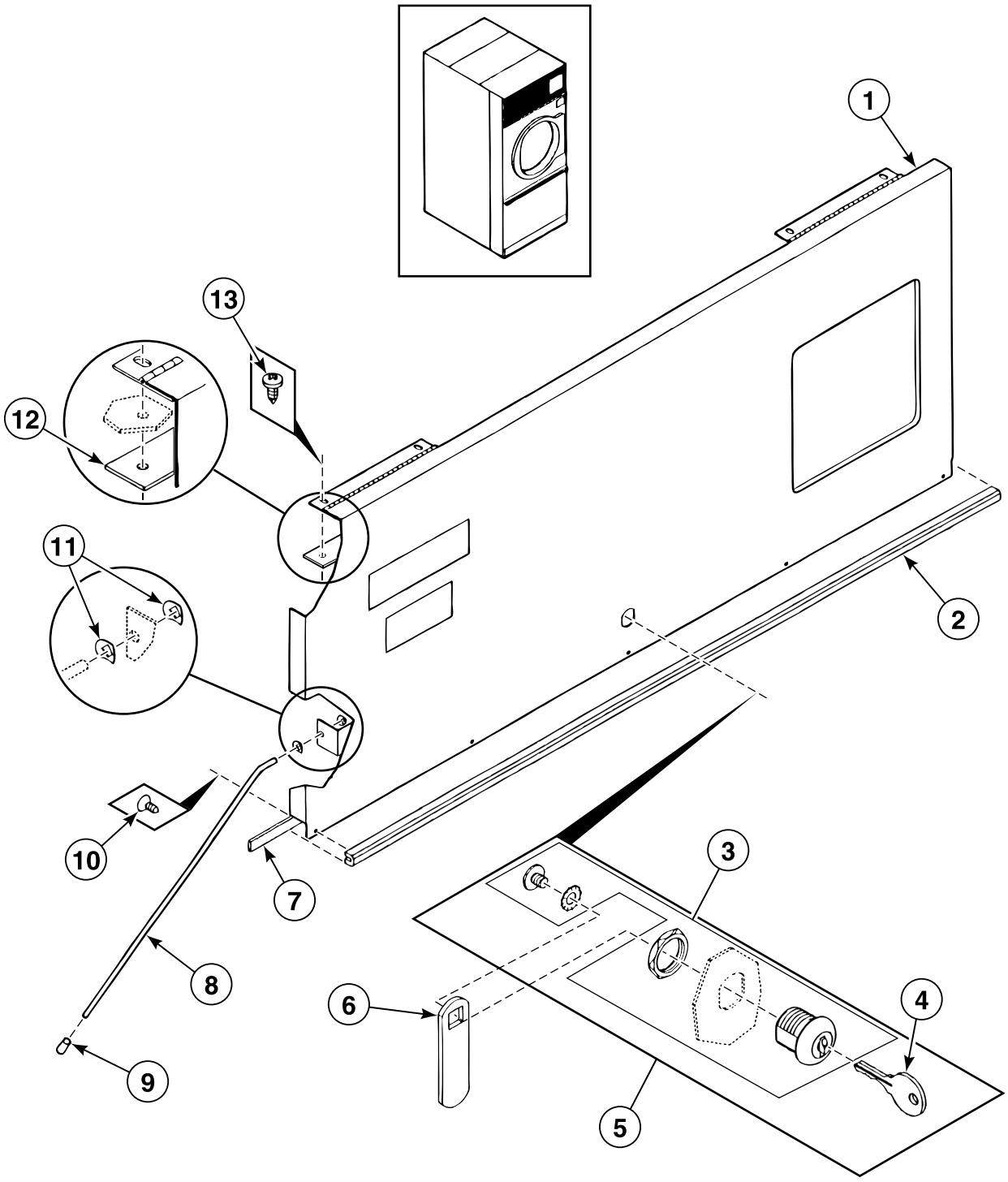

BE000153P_D0287

© Copyright, Alliance Laundry Systems LLC – DO NOT COPY or TRANSMIT

Top Front Panel

REF	PART NO.	DESCRIPTION	COMMENTS
1	254/CSA01/408	Front Panel	Model DR30
	254/CSA01/416	Front Panel	Model DR20
	254/CSA01/423	Complete Front Panel	Model DR50
	254/CSA01/424	Front Panel	Model DR50
	254/CSA01/510	Complete Front Panel	Model DR75
	254/CSA01/511	Front Panel	Model DR75
2	254/CA000/856	Fender Panel	Models DR20 and DR30
	254/CA000/857	Fender Panel	Model DR50
	254/CA000/858	Fender Panel	Model DR75
3	254/LA000/121	Lock	Models DR50 and DR75
4	254/LA000/119	Key	Models DR50 and DR75
5	254/LA000/121	Lock	Models DR20 and DR30
6	254/LA011/941	Lock	
7	254/CA013/098	Draught Band	Models DR50 and DR75
	254/TU002/853	Draught Band	Models DR20 and DR30
8	254/CA010/085	Axle	
9	254/CA000/617	Cap	
10	254/SB000/936	Screw	Models DR20 and DR30
	254/SB000/951	Screw	Models DR50 and DR75
11	254/SB000/971	Key	
12	254/00048/00	Plate Assembly	
13	254/TU007/733	Screw	

© Copyright, Alliance Laundry Systems LLC – DO NOT COPY or TRANSMIT

Middle Front Panel

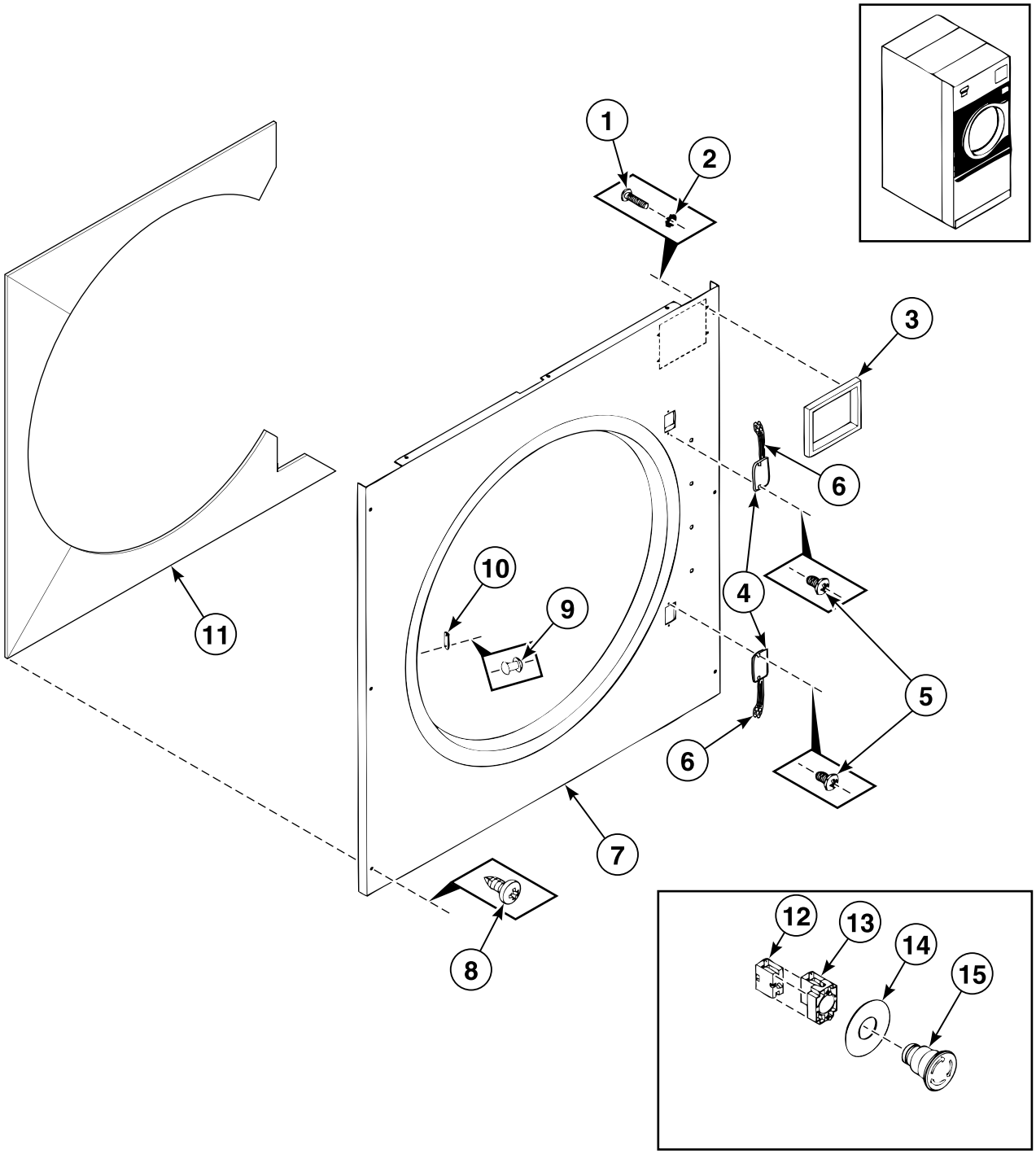

BE000149BP_D0287

© Copyright, Alliance Laundry Systems LLC – DO NOT COPY or TRANSMIT

Middle Front Panel

REF	PART NO.	DESCRIPTION	COMMENTS
1	254/SB000/924	Screw	
2	254/SB000/938	Washer	
3	254/CA000/699	Coin Box	
4	254/00017/00	Magnetic Switch Holder	
5	254/SB000/975	Screw	
6	254/ESA00/862	Reed Switch Assembly	
7	254/CSA01/380	Panel	Model DR20; OPL
	254/CSA01/392	Panel	Model DR30; OPL
	254/CSA01/406	Panel	Model DR30; Coin
	254/CSA01/414	Panel	Model DR20; Coin
	254/CSA01/427	Panel	Model DR50; Coin
	254/CSA01/433	Panel	Model DR50; OPL
	254/CSA01/514	Panel	Model DR75; OPL
	254/CSA01/524	Panel	Model DR75; Coin
8	254/TU007/733	Screw	
9	254/TU003/213	Rivet	
10	254/TU002/876	Lock	
11	254/CA000/675	Insulation Panel	Model DR20
	254/CA000/676	Insulation Panel	Model DR30
	254/CSA01/426	Insulation Panel	Model DR50; Coin
	254/CSA01/432	Insulation Panel	Model DR50; OPL
	254/CSA01/513	Insulation Panel	Model DR75; OPL
	254/CSA01/523	Insulation Panel	Model DR75; Coin
12	209/00099/06	Contact Switch	
13	209/00099/05	Contact	
14	209/00520/00	Telem Sticker	
15	209/00248/00	Mushroom Pushbutton	

© Copyright, Alliance Laundry Systems LLC – DO NOT COPY or TRANSMIT

Door

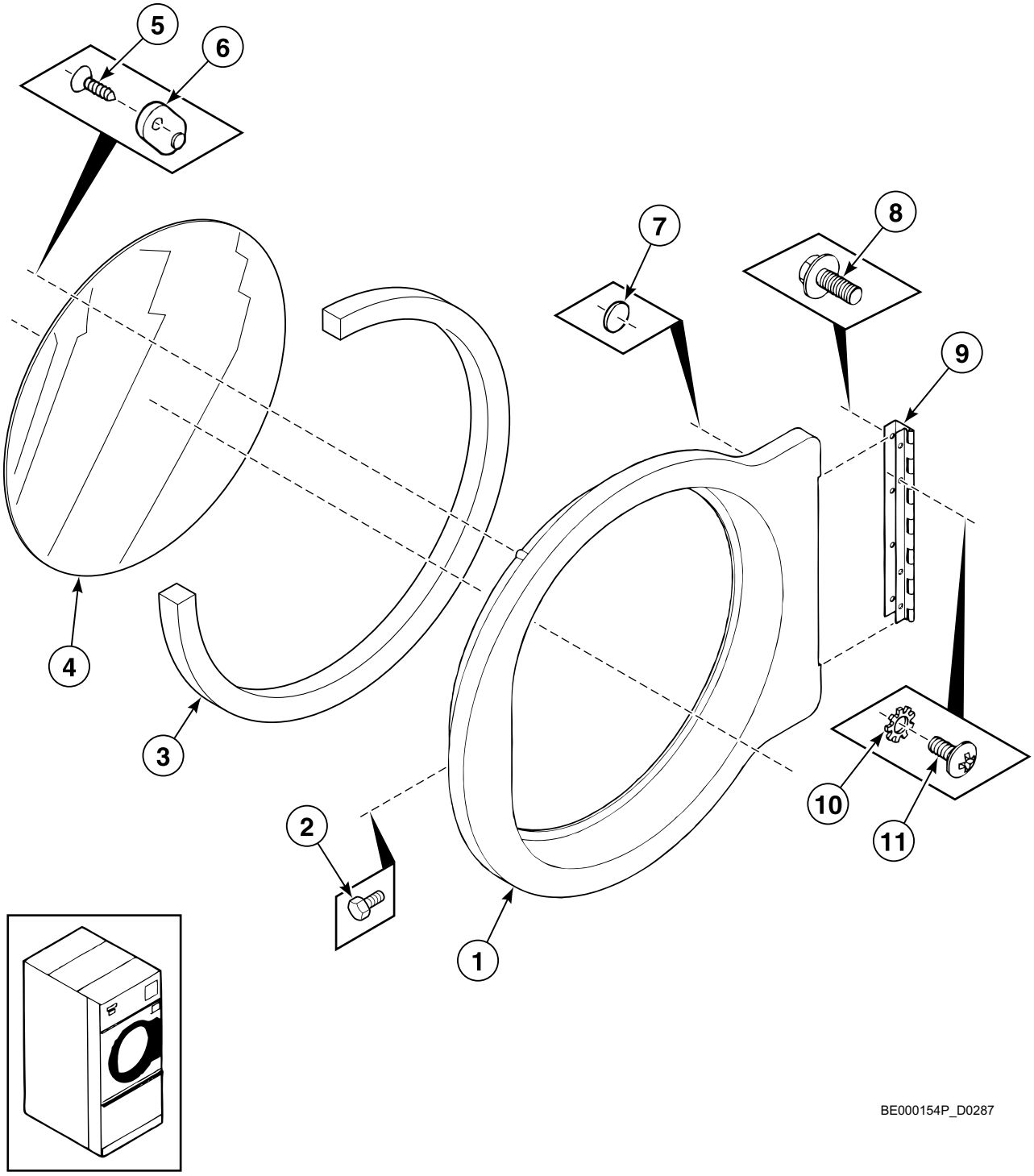

© Copyright, Alliance Laundry Systems LLC – DO NOT COPY or TRANSMIT

Door

REF	PART NO.	DESCRIPTION	COMMENTS
1	254/00010/00	Door	
2	254/SB000/967	Screw	
3	254/MD000/359	Door Gasket	
4	254/00011/00	Door Glass	
5	254/00049/00	Screw	Set of 3
6	254/00010/01	Door Glass Holder	
7	254/MD000/337	Reed Switch Magnet	
8	254/SB000/982	Bolt	
9	254/00013/00	Door Hinge	
10	254/SB000/852	Washer	
11	254/P0000/219	Screw	

© Copyright, Alliance Laundry Systems LLC – DO NOT COPY or TRANSMIT

Door Assembly

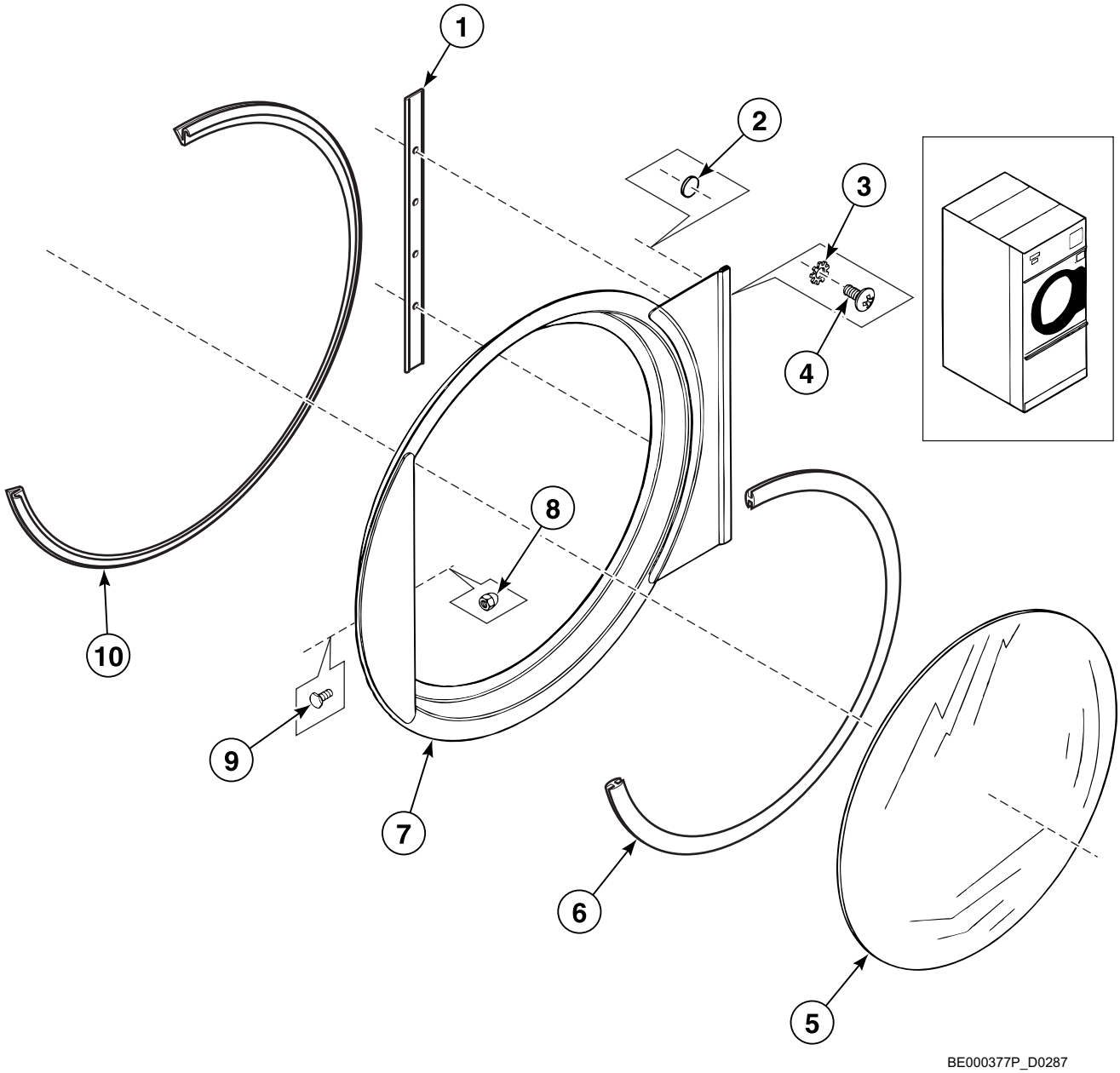

© Copyright, Alliance Laundry Systems LLC – DO NOT COPY or TRANSMIT

Door Assembly

REF	PART NO.	DESCRIPTION	COMMENTS
1	258/TU150/730	Door Hinge	
2	254/MD000/377	Reed Switch Magnet	
3	254/SB000/852	Washer	
4	258/SB009/210	Screw	
5	258/TU151/070	Door Glass	
6	258/TU151/080	Gasket	
7	258/TU150/760	Door	
8	258/TU484/000	Nut	
9	258/CA123/180	Screw	
10	258/MD003/600	Gasket	

© Copyright, Alliance Laundry Systems LLC – DO NOT COPY or TRANSMIT

Lower Front Panel

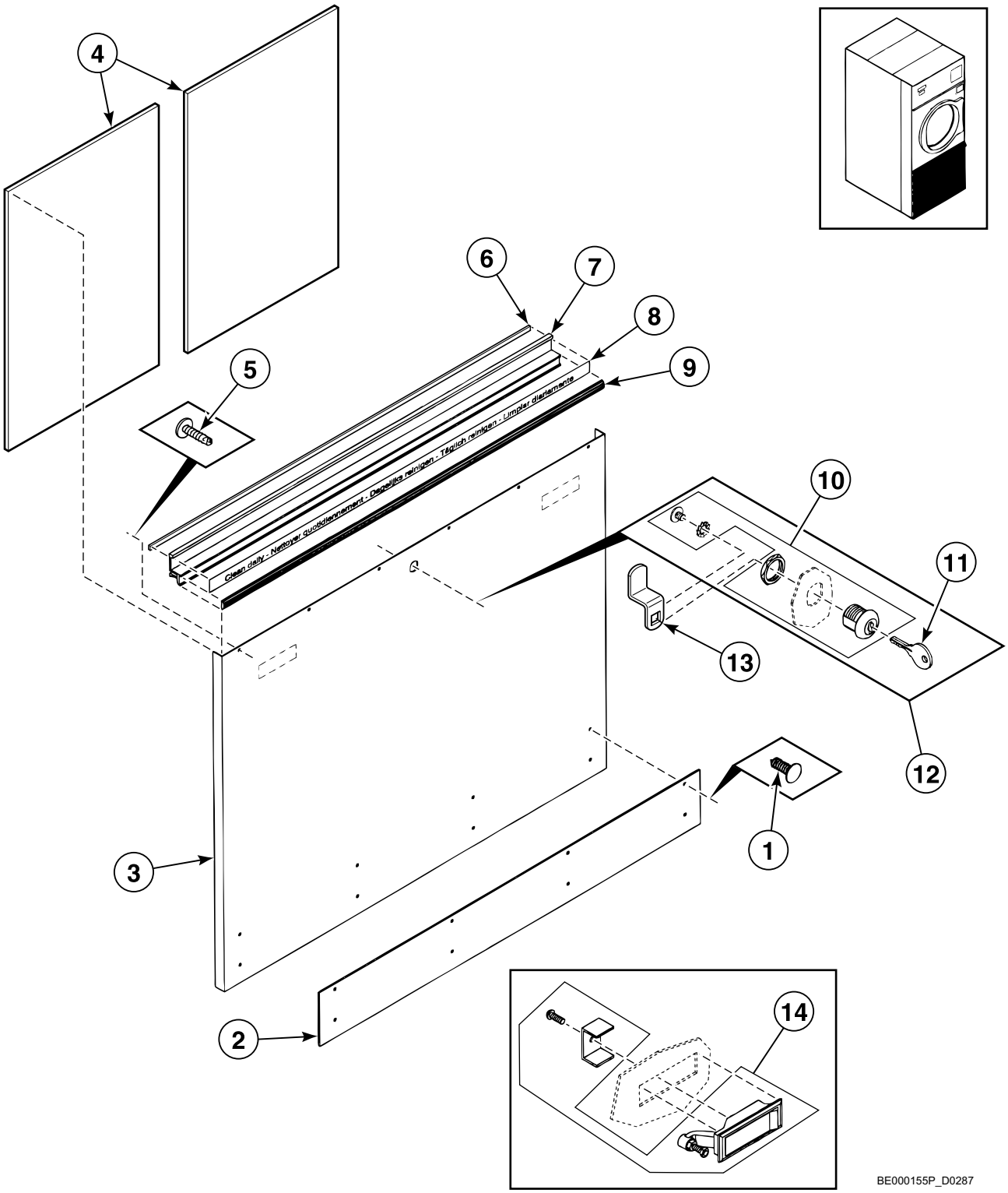

© Copyright, Alliance Laundry Systems LLC – DO NOT COPY or TRANSMIT

Lower Front Panel

REF	PART NO.	DESCRIPTION	COMMENTS
1	254/SB000/949	Screw	
2	254/CA000/828	Door Fender	Model DR20
	254/CA000/833	Door Fender	Model DR30
	254/CA000/838	Door Fender	Model DR50
	254/CA000/839	Door Fender	Model DR75
3	254/CSA01/097	Front Panel	Model DR20; Coin
	254/CSA01/098	Front Panel	Model DR30; Coin
	254/CSA01/099	Front Panel	Model DR50; OPL
	254/CSA01/383	Front Panel	Model DR20; OPL
	254/CSA01/387	Front Panel	Model DR30; OPL
	254/CSA01/429	Front Panel	Model DR50; Coin
	254/CSA01/516	Front Panel	Model DR75; OPL
	254/CSA01/593	Front Panel	Model DR75; Coin
4	254/CA011/929	Insulation Panel	Model DR20
	254/CA011/930	Insulation Panel	Model DR30
	254/CA012/029	Insulation Panel	Model DR50
	254/CA013/131	Insulation Panel	Model DR75
5	254/TU007/733	Screw	
6	254/TU002/853	Draught Band	
7	254/CA000/645	Door Trim	Model DR20
	254/CA000/646	Door Trim	Model DR30
	254/CA000/647	Door Trim	Model DR50
	254/CA000/697	Door Trim	Model DR75
8	254/00019/00	Clean Lint Screen Label	
9	254/CA000/655	Fender	
10	254/LA000/121	Lock	Models DR50 and DR75
11	254/LA000/119	Key	Models DR50 and DR75
12	254/LA000/121	Lock	Models DR20 and DR30
13	254/LA011/359	Lock Hatch	
14	254/LA000/123	Lock Hatch Assembly	Models DR50 and DR75
	254/LA000/124	Lock Hatch Assembly	Models DR20 and DR30

© Copyright, Alliance Laundry Systems LLC – DO NOT COPY or TRANSMIT

Operating Door - DX3 and DX3R OPL Models

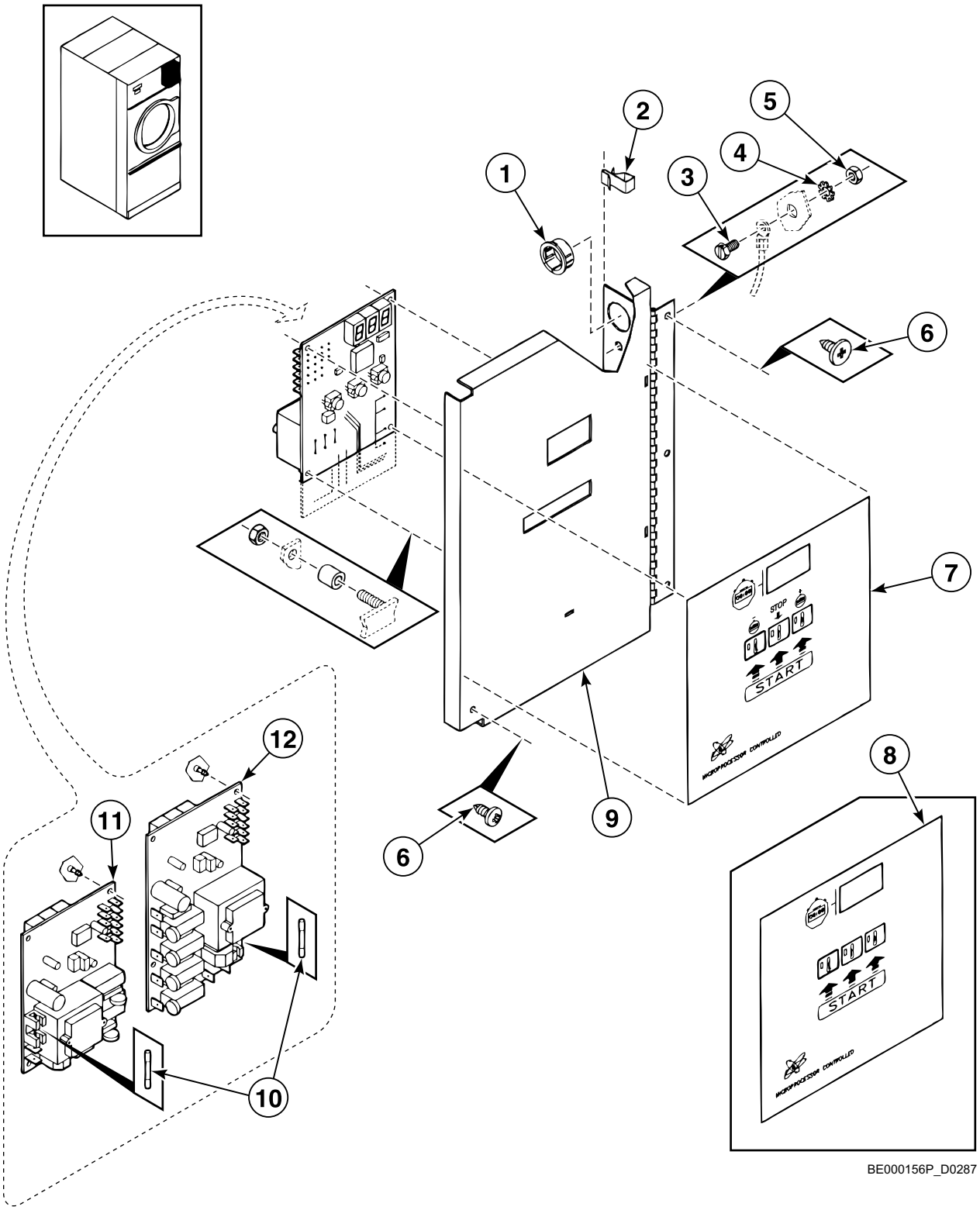

© Copyright, Alliance Laundry Systems LLC – DO NOT COPY or TRANSMIT

Operating Door - DX3 and DX3R OPL Models

REF	PART NO.	DESCRIPTION	COMMENTS
1	254/SB000/868	Duct	
2	254/EA000/395	Wiring Clip	
3	254/SB000/898	Bolt	
4	254/TU011/613	Washer	
5	254/TU002/842	Nut	
6	254/SB000/836	Screw	
7	254/00015/00	Keypad Label	
8	254/00021/00	Operating Touchpad	
9	254/CSA01/529	Operating Door	
10	209/00506/00	Fuse	
11	254/00043/00	Timer	
12	254/00024/00	Control Board	Reversing
	254/00030/00	Control Board	Non-reversing

© Copyright, Alliance Laundry Systems LLC – DO NOT COPY or TRANSMIT

Operating Door - DX3S and DX3RS OPL Models

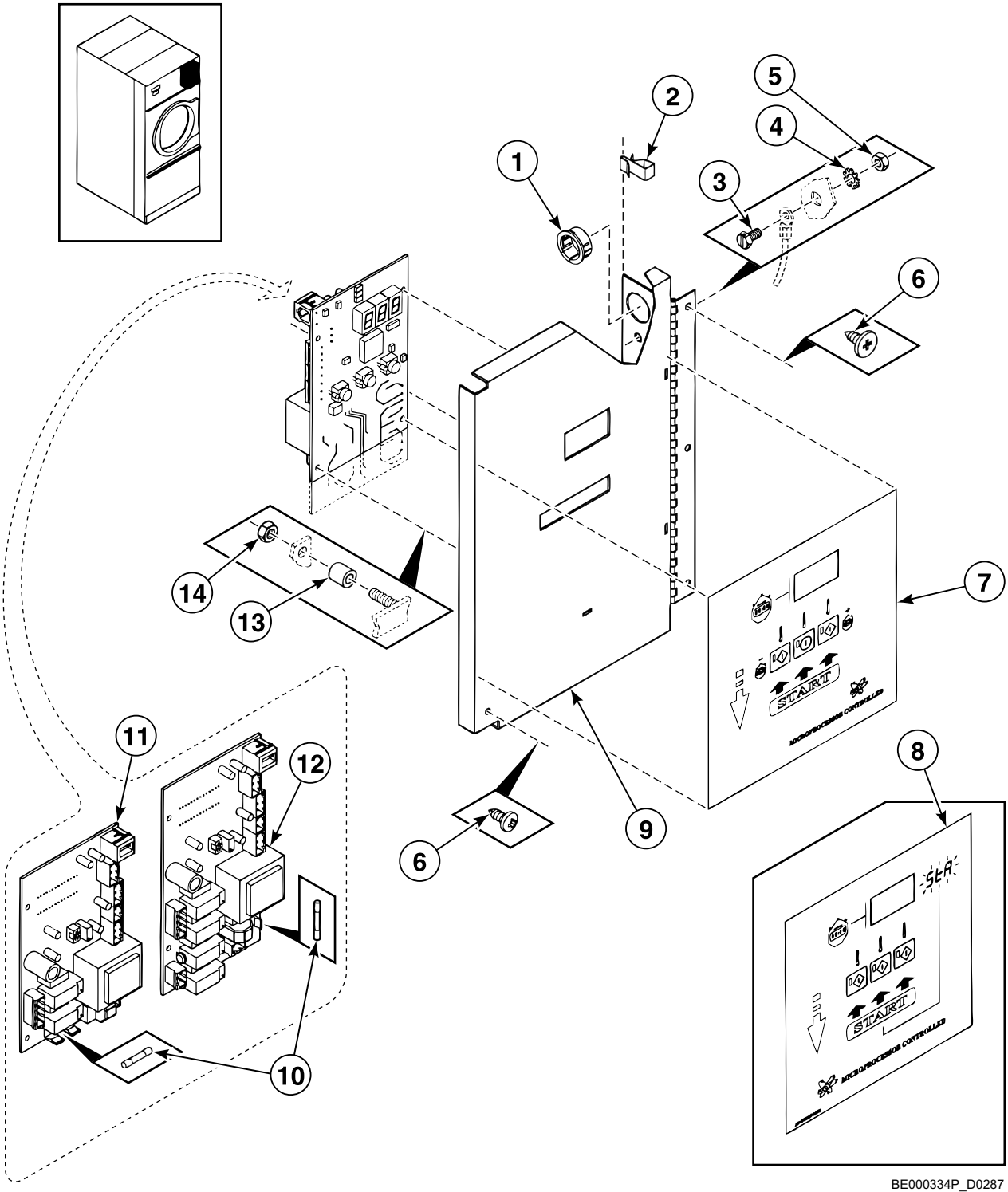

BE000334P_D0287

© Copyright, Alliance Laundry Systems LLC – DO NOT COPY or TRANSMIT

Operating Door - DX3S and DX3RS OPL Models

REF	PART NO.	DESCRIPTION	COMMENTS
1	254/SB000/868	Duct	
2	254/EA000/395	Wiring Clip	
3	254/SB000/898	Bolt	
4	254/TU011/613	Washer	
5	254/TU002/842	Nut	
6	254/SB000/836	Screw	
7	254/00069/00	Keypad Label	
8	254/00021/00	Operating Touchpad	
9	254/CSA01/529	Operating Door	
10	209/00506/00	Fuse	
11	254/00066/00	Control Board	
12	254/00067/00	Control Board	
13	254/TU014/701	Spacer	
14	254/TUD00/367	Nut	

© Copyright, Alliance Laundry Systems LLC – DO NOT COPY or TRANSMIT

Operating Door - DX3 and DX3R Coin Models

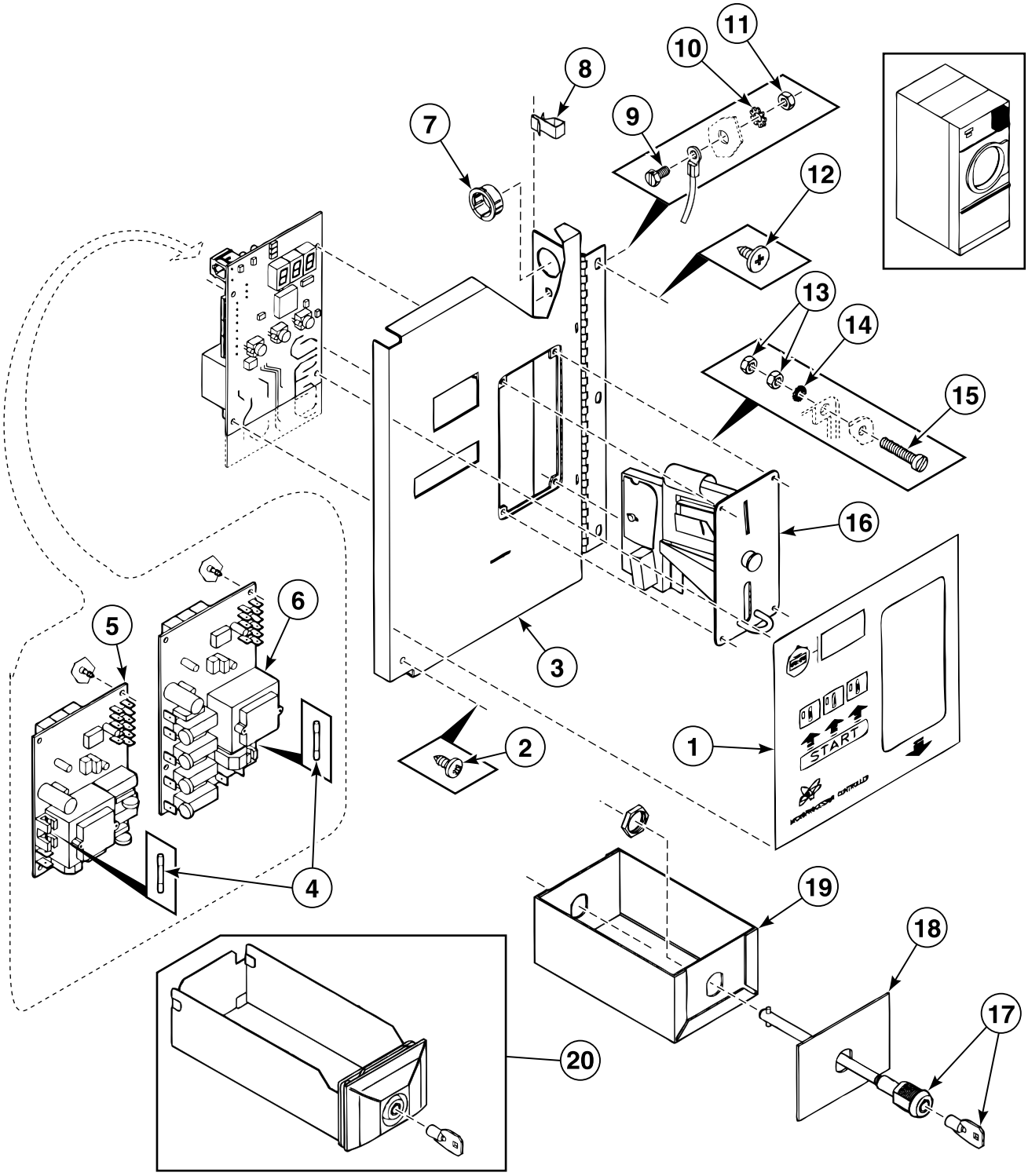

© Copyright, Alliance Laundry Systems LLC – DO NOT COPY or TRANSMIT

Operating Door - DX3 and DX3R Coin Models

REF	PART NO.	DESCRIPTION	COMMENTS
1	254/00033/00	Keypad Label	
2	254/TU007/733	Screw	
3	254/CSA01/530	Operating Door	
4	209/00506/00	Fuse	
5	254/00043/00	Timer	
6	254/00024/00	Control Board	
7	254/SB000/868	Duct	
8	254/EA000/395	Wiring Clip	
9	254/SB000/898	Bolt	
10	254/TU011/613	Washer	
11	254/TU002/842	Nut	
12	254/SB000/836	Screw	
13	204/00008/00	Nut	
14	203/00007/00	Washer	
15	207/00108/00	Screw	
16	209/00305/00	Coin Meter	
17	254/LA000/401	Lock	
18	254/CA011/265	Front Plate	
19	254/CSA00/753	Coin Box	
20	254/TU009/225	Coin Vault	

© Copyright, Alliance Laundry Systems LLC – DO NOT COPY or TRANSMIT

Operating Door - DX3S and DX3RS Coin Models

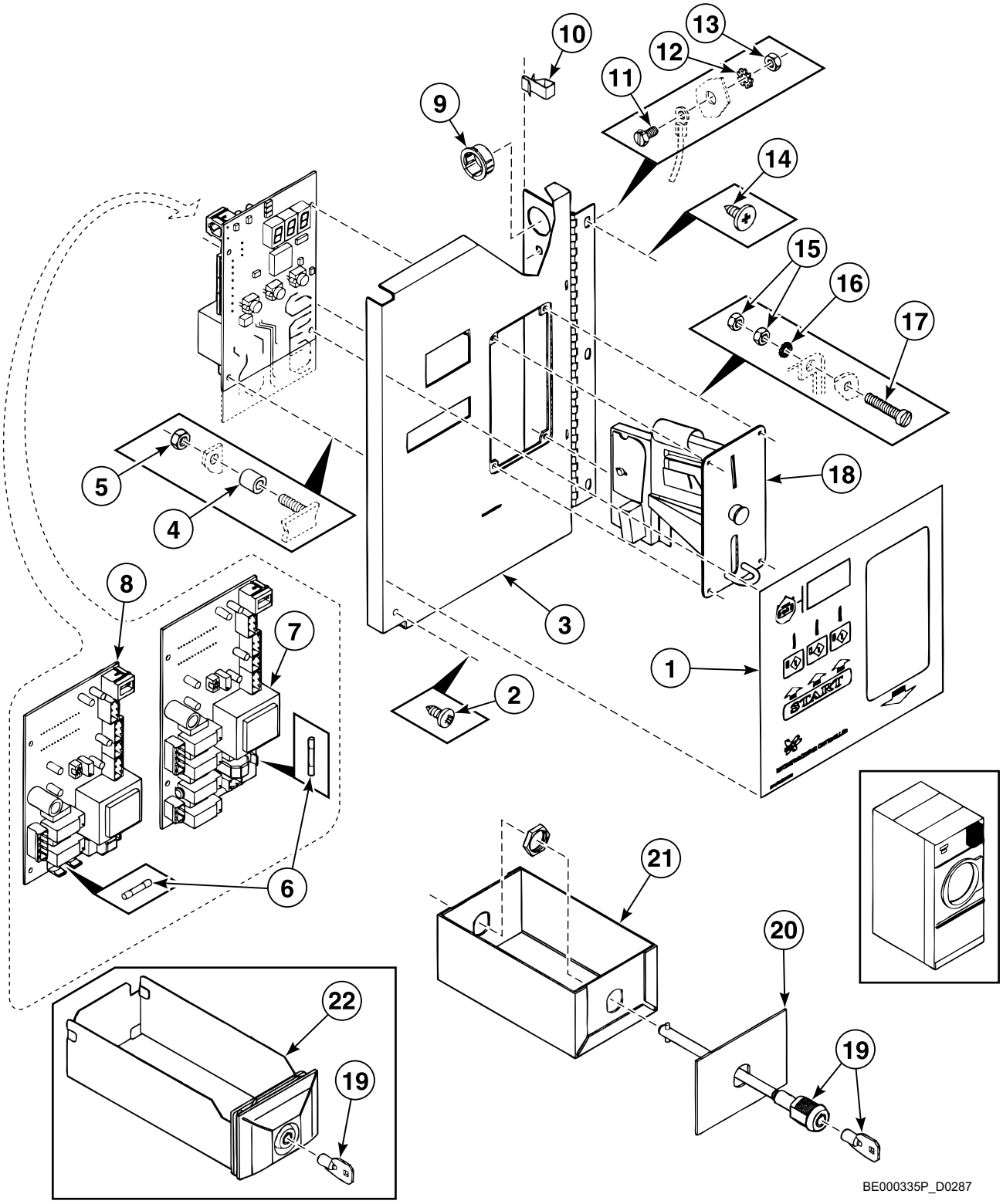

© Copyright, Alliance Laundry Systems LLC – DO NOT COPY or TRANSMIT

Operating Door - DX3S and DX3RS Coin Models

REF	PART NO.	DESCRIPTION	COMMENTS
1	254/00033/00	Keypad Label	
2	254/TU007/733	Screw	
3	254/CSA01/530	Operating Door	
4	254/TU014/701	Spacer	
5	254/TUD00/367	Nut	
6	209/00506/00	Fuse	
7	254/00067/00	Control Board	
8	254/00066/00	Control Board	
9	254/SB000/868	Duct	
10	254/EA000/395	Wiring Clip	
11	254/SB000/898	Bolt	
12	254/TU011/613	Washer	
13	254/TU002/842	Nut	
14	254/SB000/836	Screw	
15	204/00008/00	Nut	
16	203/00007/00	Washer	
17	207/00108/00	Screw	
18	209/00305/00	Coin Meter	
19	254/LA000/401	Lock	
20	254/CA011/265	Front Plate	
21	254/CSA00/753	Coin Box	
22	254/TU009/225	Coin Vault	

© Copyright, Alliance Laundry Systems LLC – DO NOT COPY or TRANSMIT

Operating Door - PRO OPL Models

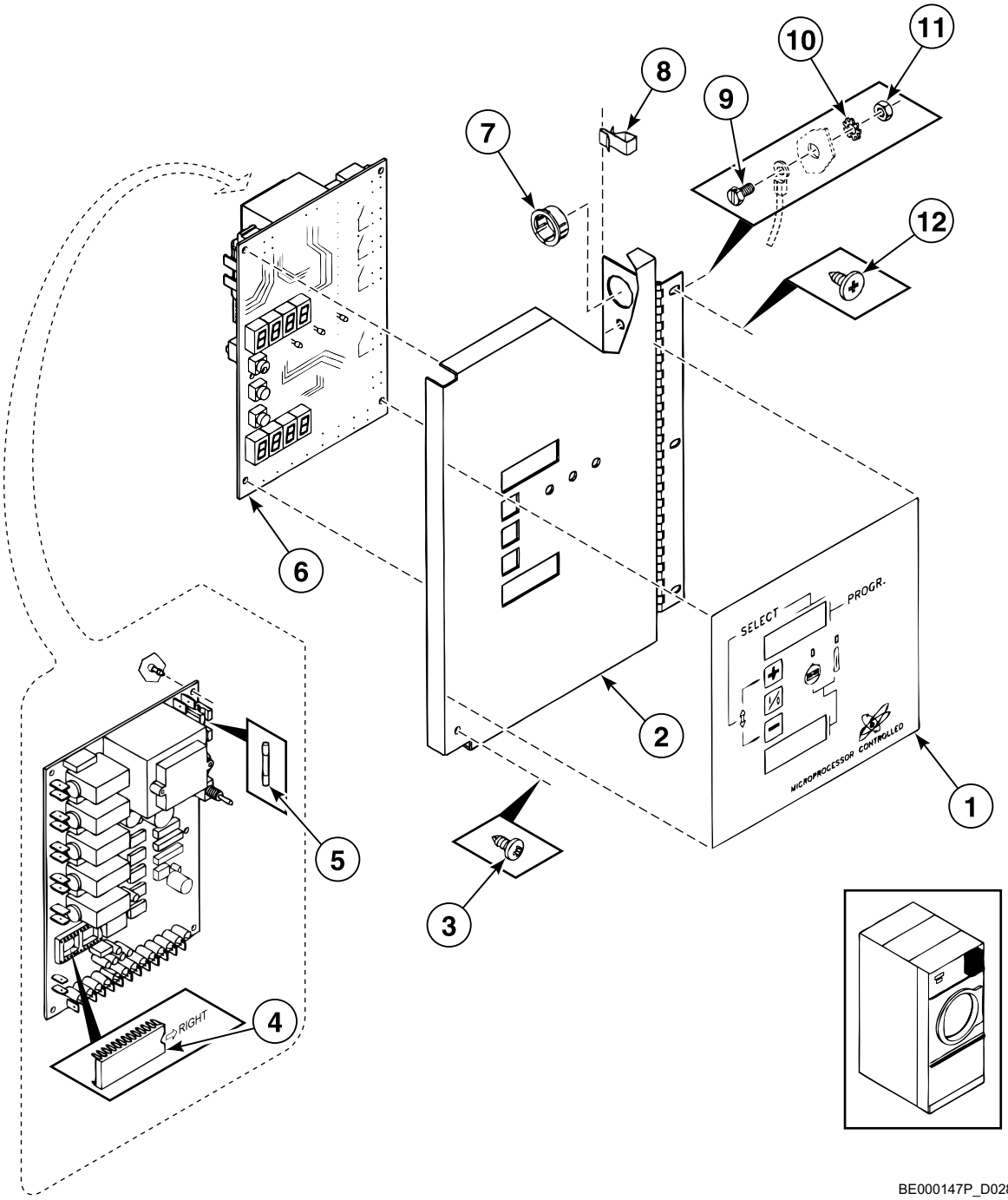

BE000147P_D0287

© Copyright, Alliance Laundry Systems LLC – DO NOT COPY or TRANSMIT

Operating Door - PRO OPL Models

REF	PART NO.	DESCRIPTION	COMMENTS
1	254/00039/00	Operating Touchpad	
2	254/CSA01/535	Operating Door	
3	254/TU007/733	Screw	
4	209/00266/01	Eprom	
5	209/00507/00	Fuse	
6	254/00070/00	Control Board	
7	254/SB000/868	Duct	
8	254/EA000/395	Wiring Clip	
9	254/SB000/898	Bolt	
10	254/TU011/613	Washer	
11	254/TU002/842	Nut	
12	254/SB000/836	Screw	

© Copyright, Alliance Laundry Systems LLC – DO NOT COPY or TRANSMIT

Operating Door - PRO/HC OPL Models without Plugs

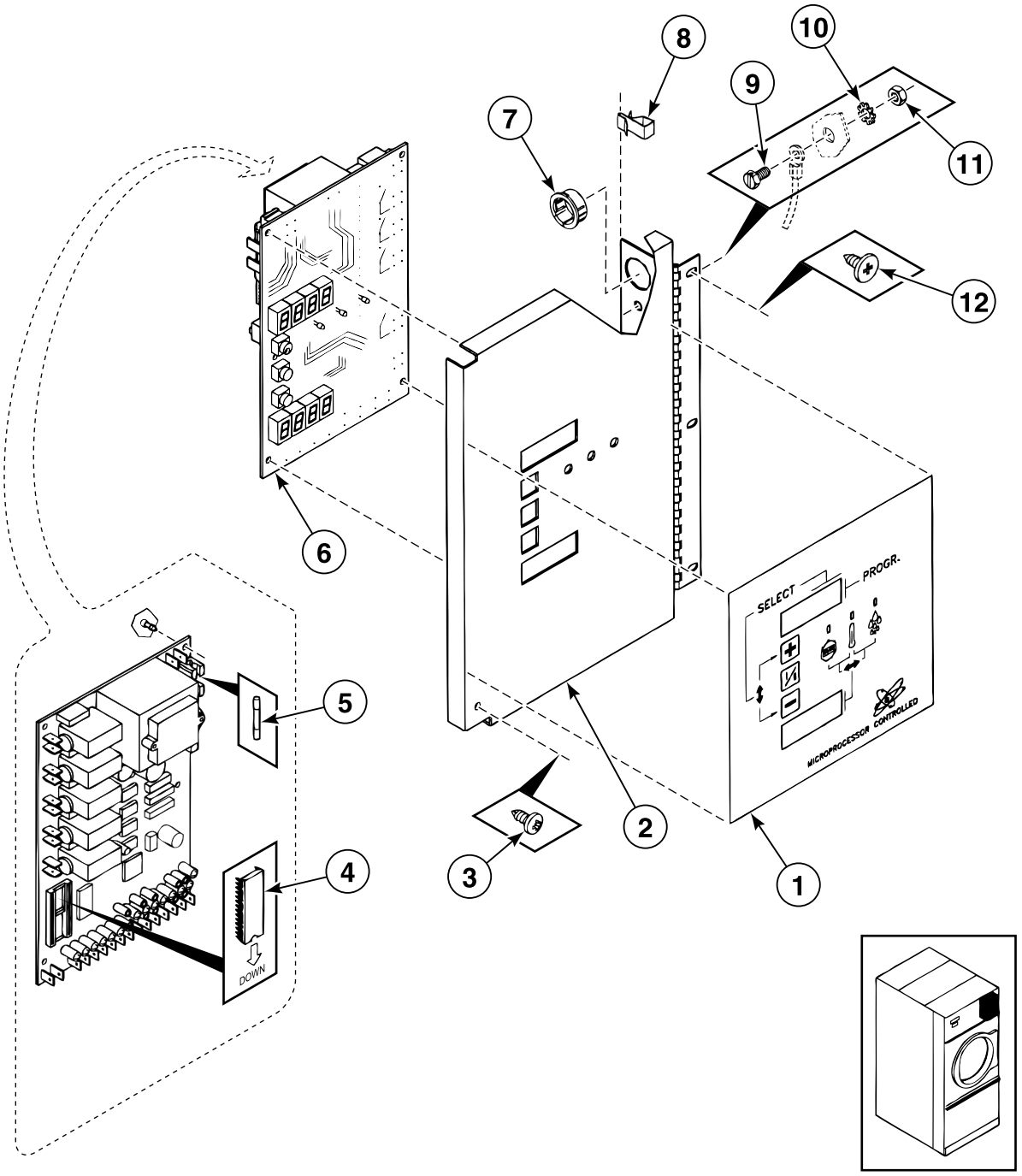

BE000148P_D0287

© Copyright, Alliance Laundry Systems LLC – DO NOT COPY or TRANSMIT

Operating Door - PRO/HC OPL Models without Plugs

REF	PART NO.	DESCRIPTION	COMMENTS
1	254/00018/00	Control Label	
2	254/CSA01/535	Operating Door	
3	254/TU007/733	Screw	
4	209/00266/01	Eprom	
5	209/00507/00	Fuse	
6	254/00070/00	Control Board	
7	254/SB000/868	Duct	
8	254/EA000/395	Wiring Clip	
9	254/SB000/898	Bolt	
10	254/TU011/613	Washer	
11	254/TU002/842	Nut	
12	254/SB000/836	Screw	

© Copyright, Alliance Laundry Systems LLC – DO NOT COPY or TRANSMIT

Operating Door - PRO/HC OPL Models with Plugs

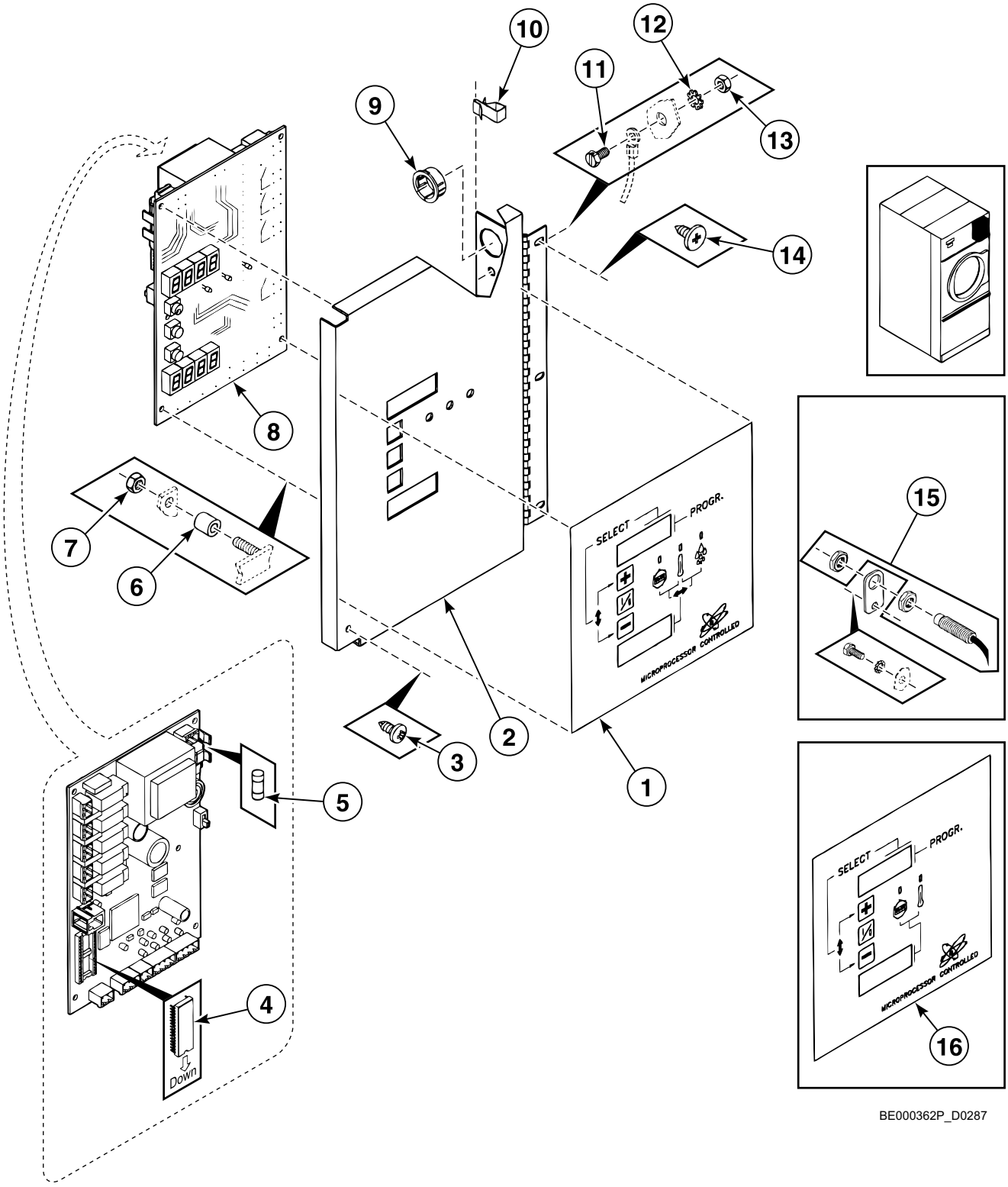

© Copyright, Alliance Laundry Systems LLC – DO NOT COPY or TRANSMIT

Operating Door - PRO/HC OPL Models with Plugs

REF	PART NO.	DESCRIPTION	COMMENTS
1	254/00018/00	Control Label	
2	254/CSA01/535	Operating Door	
3	254/TU007/733	Screw	
4	209/00266/01	Eprom	
5	209/00507/00	Fuse	
6	254/TU014/01	Spacer	
7	254/TUD00/367	Nut	
8	254/00070/00	Control Board	
9	254/SB000/868	Duct	
10	254/EA000/395	Wiring Clip	
11	254/SB000/898	Bolt	
12	254/TU011/613	Washer	
13	254/TU002/842	Nut	
14	254/SB000/836	Screw	
15	254/TU014/414	Rotation Sensor	
16	254/00039/00	Operating Touchpad	

© Copyright, Alliance Laundry Systems LLC – DO NOT COPY or TRANSMIT

Drum - DR20 Models

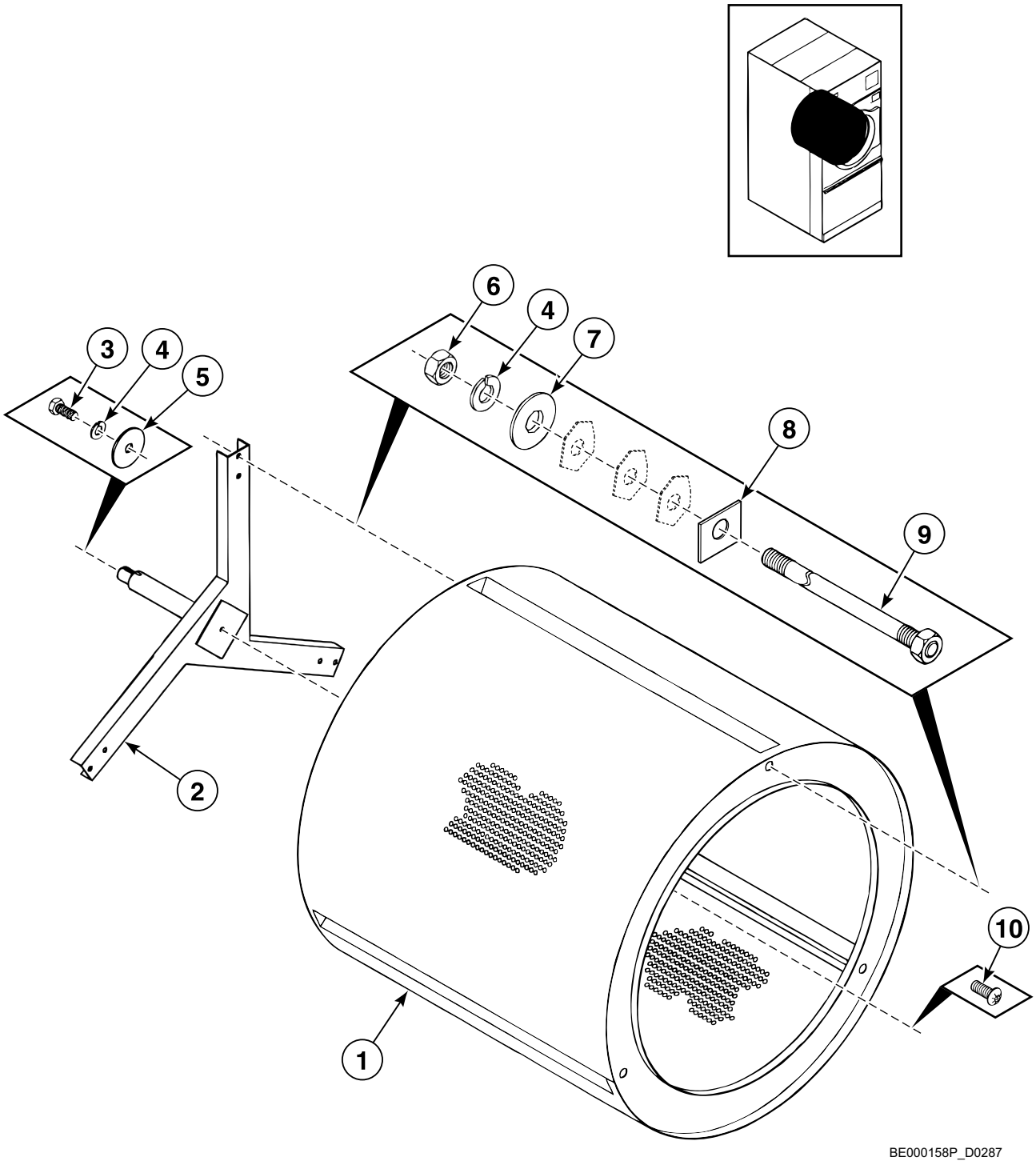

© Copyright, Alliance Laundry Systems LLC – DO NOT COPY or TRANSMIT

Drum - DR20 Models

REF	PART NO.	DESCRIPTION	COMMENTS
1	254/CSA00/845	Drum	
2	254/CSA00/823	Trunnion	
3	254/TU005/439	Bolt	
4	254/TU002/814	Washer	
5	254/SB000/843	Washer	
6	254/C0000/249	Nut	
7	254/VSB00/130	Washer	
8	254/CA010/355	Reinforcement Bracket	
9	254/DA000/418	Bar Drum	
10	254/SB000/835	Screw	

© Copyright, Alliance Laundry Systems LLC – DO NOT COPY or TRANSMIT

Drum - DR30 Models

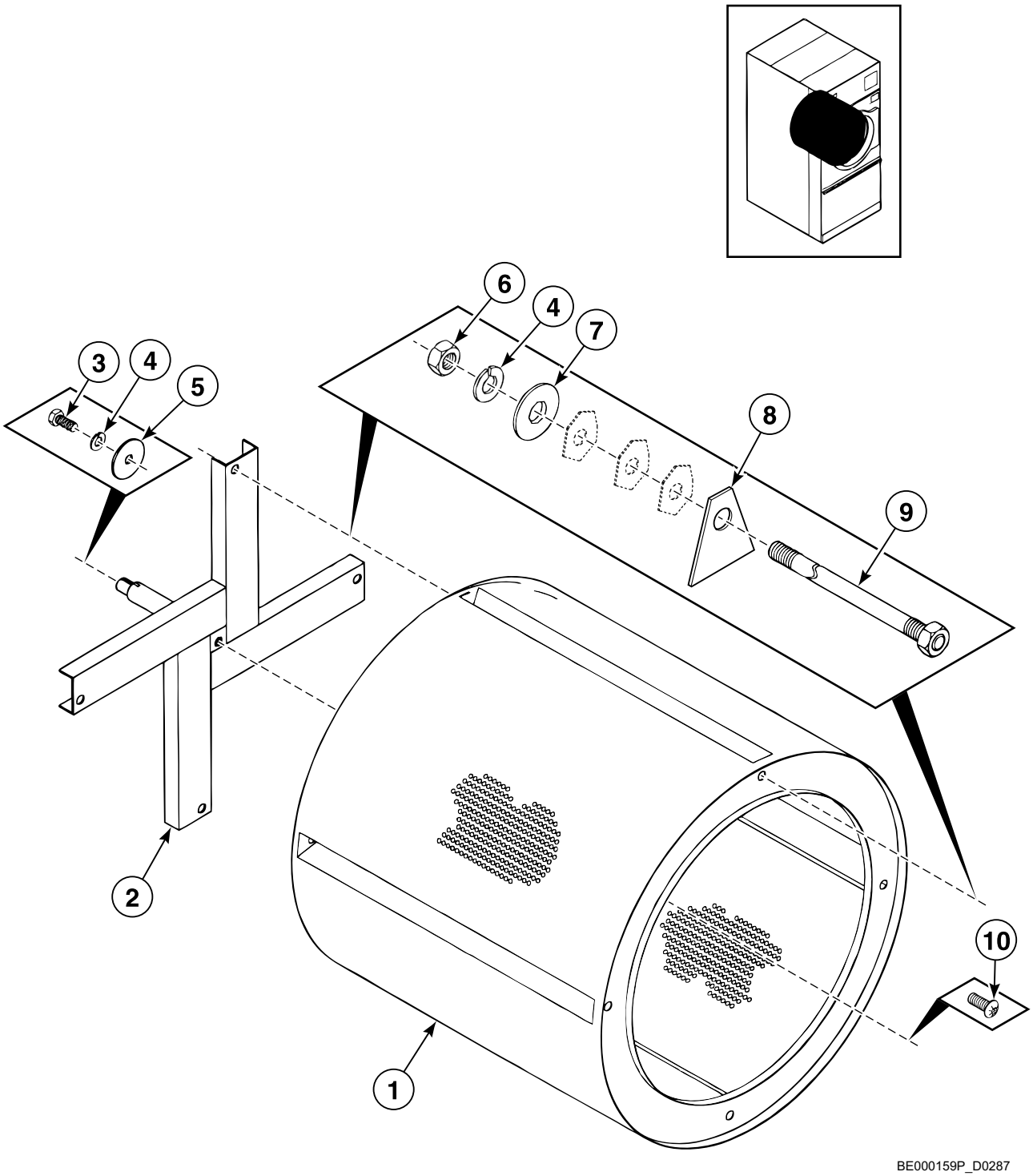

© Copyright, Alliance Laundry Systems LLC – DO NOT COPY or TRANSMIT

Drum - DR30 Models

REF	PART NO.	DESCRIPTION	COMMENTS
1	254/CSA00/847	Drum	
2	254/CSA01/434	Trunnion	
3	254/TU005/439	Bolt	
4	254/TU002/814	Washer	
5	254/SB000/843	Washer	
6	254/C0000/249	Nut	
7	254/VSB00/130	Washer	
8	254/00050/00	Reinforcement Bracket	
9	254/DA000/445	Bolt	
10	254/SB000/835	Screw	

© Copyright, Alliance Laundry Systems LLC – DO NOT COPY or TRANSMIT

Drum - DR50 and DR75 Models

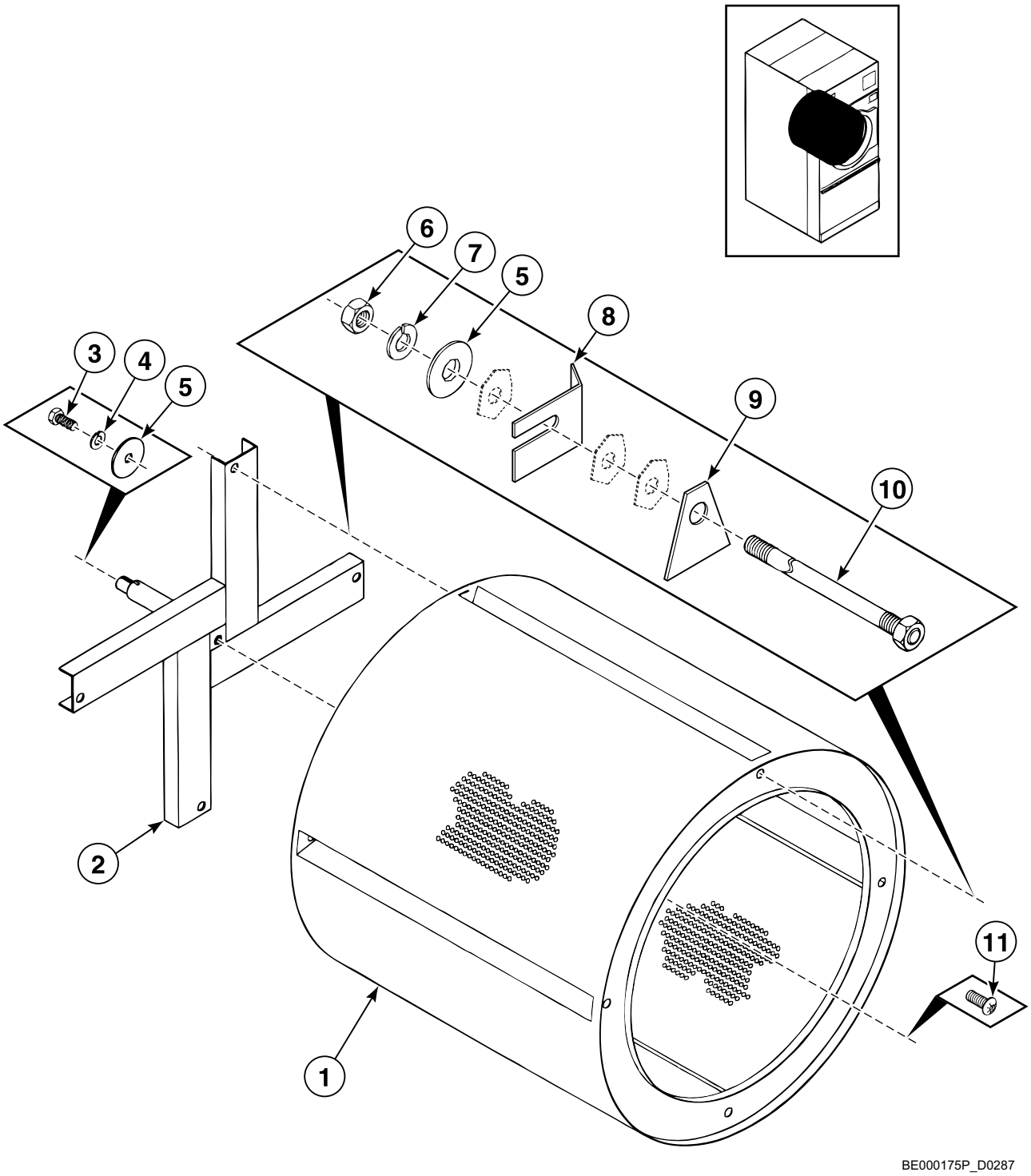

© Copyright, Alliance Laundry Systems LLC – DO NOT COPY or TRANSMIT

Drum - DR50 and DR75 Models

REF	PART NO.	DESCRIPTION	COMMENTS
1	254/CSA01/540	Drum	Model DR50; RVS
	254/CSA00/848	Drum	Model DR50; Galvanized
	254/CSA01/591	Drum	Model DR75; RVS
	254/CSA00/849	Drum	Model DR75; Galvanized
2	254/CSA00/822	Trunnion Assembly	Model DR50
	254/CSA00/729	Trunnion Assembly	Model DR75
3	254/TU005/439	Bolt	
4	254/TU002/814	Washer	
5	254/SB000/843	Washer	
6	254/TU004/787	Nut	
7	254/C0000/249	Nut	Model DR50
	254/TU002/814	Washer	Model DR75
8	154/00002/06	Shim	
9	254/00050/00	Reinforcement Bracket	
10	254/DA011/249	Bolt	Model DR50
	254/DA011/248	Bolt	Model DR75
11	254/SB000/835	Screw	

© Copyright, Alliance Laundry Systems LLC – DO NOT COPY or TRANSMIT

Cabinet Back

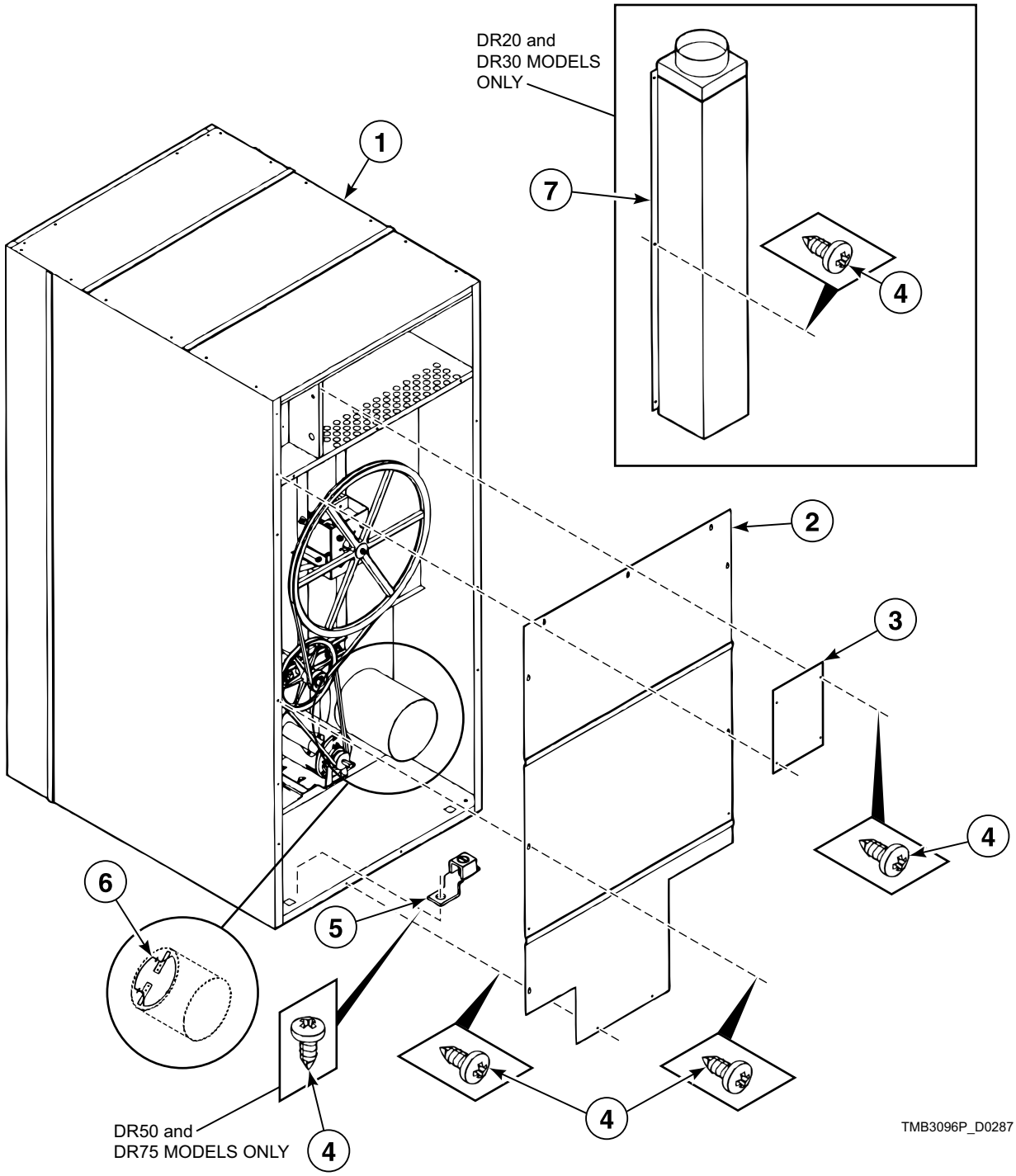

© Copyright, Alliance Laundry Systems LLC – DO NOT COPY or TRANSMIT

Cabinet Back

REF	PART NO.	DESCRIPTION	COMMENTS
1	254/CA012/073	Panel	Model DR50
	254/CA013/027	Panel	Model DR75
	254/CSA50/035	Side Panel	Model DR20
	254/CSA50/036	Side Panel	Model DR30
2	254/CA011/937	Back Panel	Model DR20
	254/CA011/975	Back Panel	Model DR30
	254/CA012/016	Back Panel	Model DR50
	254/CA013/018	Back Panel	Model DR75
3	254/CA011/936	Cover Plate	
4	254/TU007/733	Screw	
5	254/EA000/466	Terminal	Models DR50 and DR75
6	254/CSA01/284	Valve	
7	254/CSA00/971	Vent Pipe	Models DR20 and DR30

© Copyright, Alliance Laundry Systems LLC – DO NOT COPY or TRANSMIT

Airflow Switch Assembly

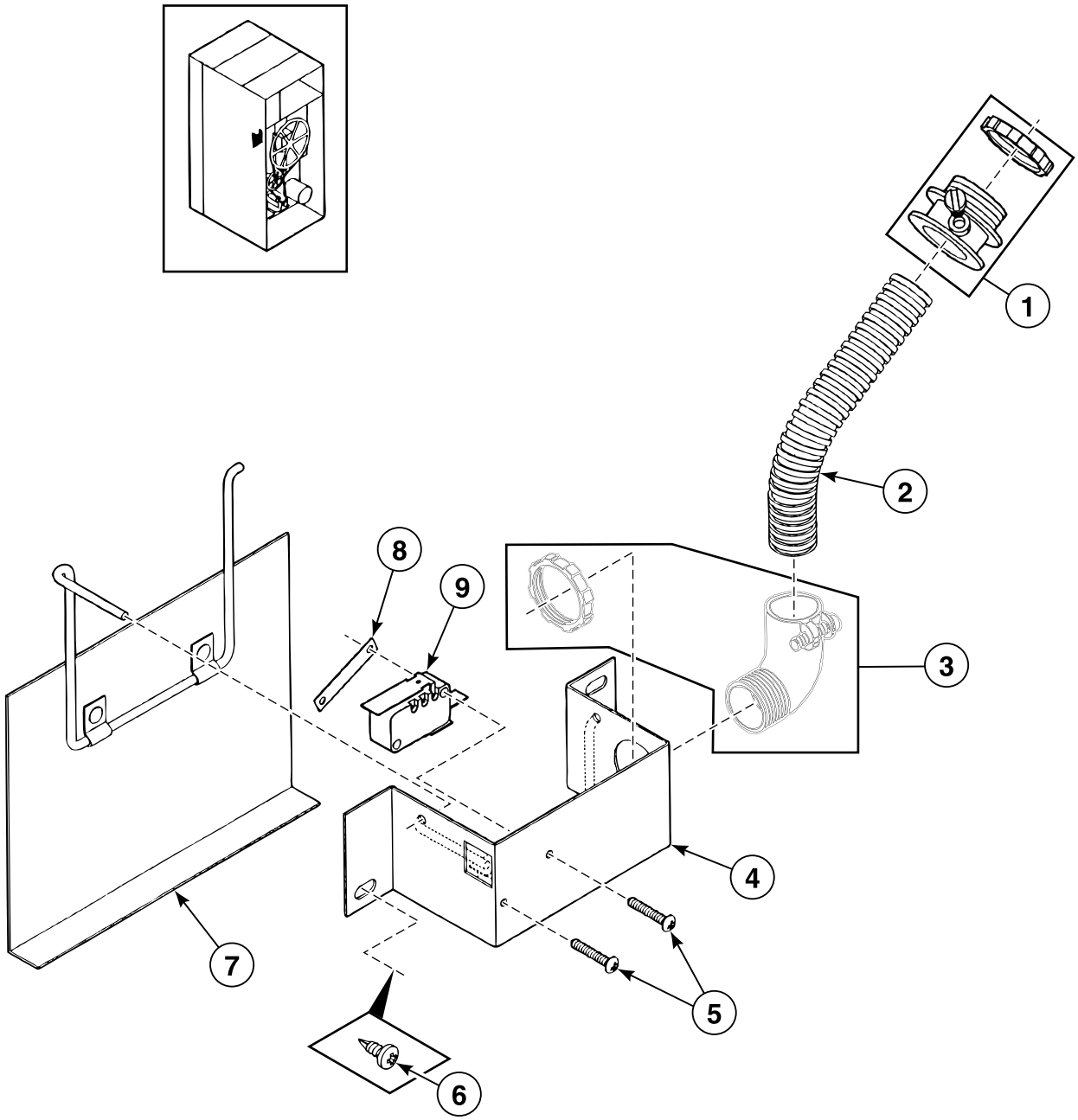

BE000161P_D0287

© Copyright, Alliance Laundry Systems LLC – DO NOT COPY or TRANSMIT

Airflow Switch Assembly

REF	PART NO.	DESCRIPTION	COMMENTS
1	254/EA000/211	Tube Connector	
2	254/EA000/234	Tubing	
3	254/EA000/212	Tube Connector	
4	254/CA011/854	Bracket	
5	254/SB000/955	Screw	
6	254/TU007/733	Screw	
7	254/CA011/853	Air Valve	
8	254/SB000/954	Switch Assembly Plate	
9	254/EA000/618	Airflow Switch	

© Copyright, Alliance Laundry Systems LLC – DO NOT COPY or TRANSMIT

Drum Drive - DR20 Models

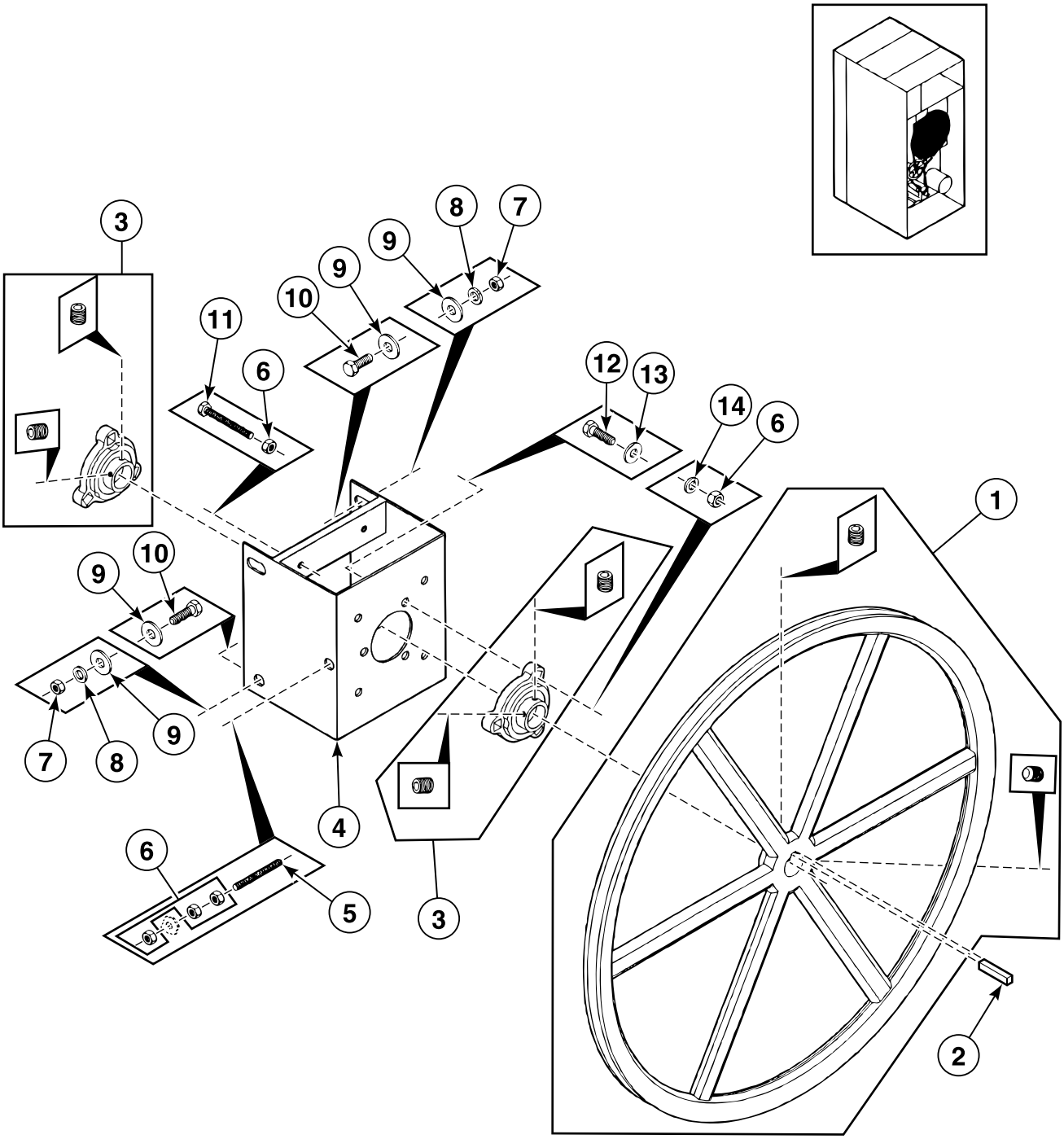

BE000162P_D0287

© Copyright, Alliance Laundry Systems LLC – DO NOT COPY or TRANSMIT

Drum Drive - DR20 Models

REF	PART NO.	DESCRIPTION	COMMENTS
1	254/DA000/519	Belt Pulley	
2	254/TU005/881	Key	For drum axle
3	254/DA000/420	Ball Bearing	
4	254/DSA00/690	Bearing	
5	254/SB000/876	Wiring Rod	
6	254/C0000/249	Nut	
7	254/TU004/787	Nut	
8	254/VSB00/134	Washer	
9	254/IB000/140	Washer	
10	254/IB000/139	Bolt	
11	254/SB000/935	Bolt	
12	254/FB000/124	Bolt	
13	254/VSB00/130	Washer	
14	254/TU002/814	Washer	

© Copyright, Alliance Laundry Systems LLC – DO NOT COPY or TRANSMIT

Drum Drive - DR30 Models

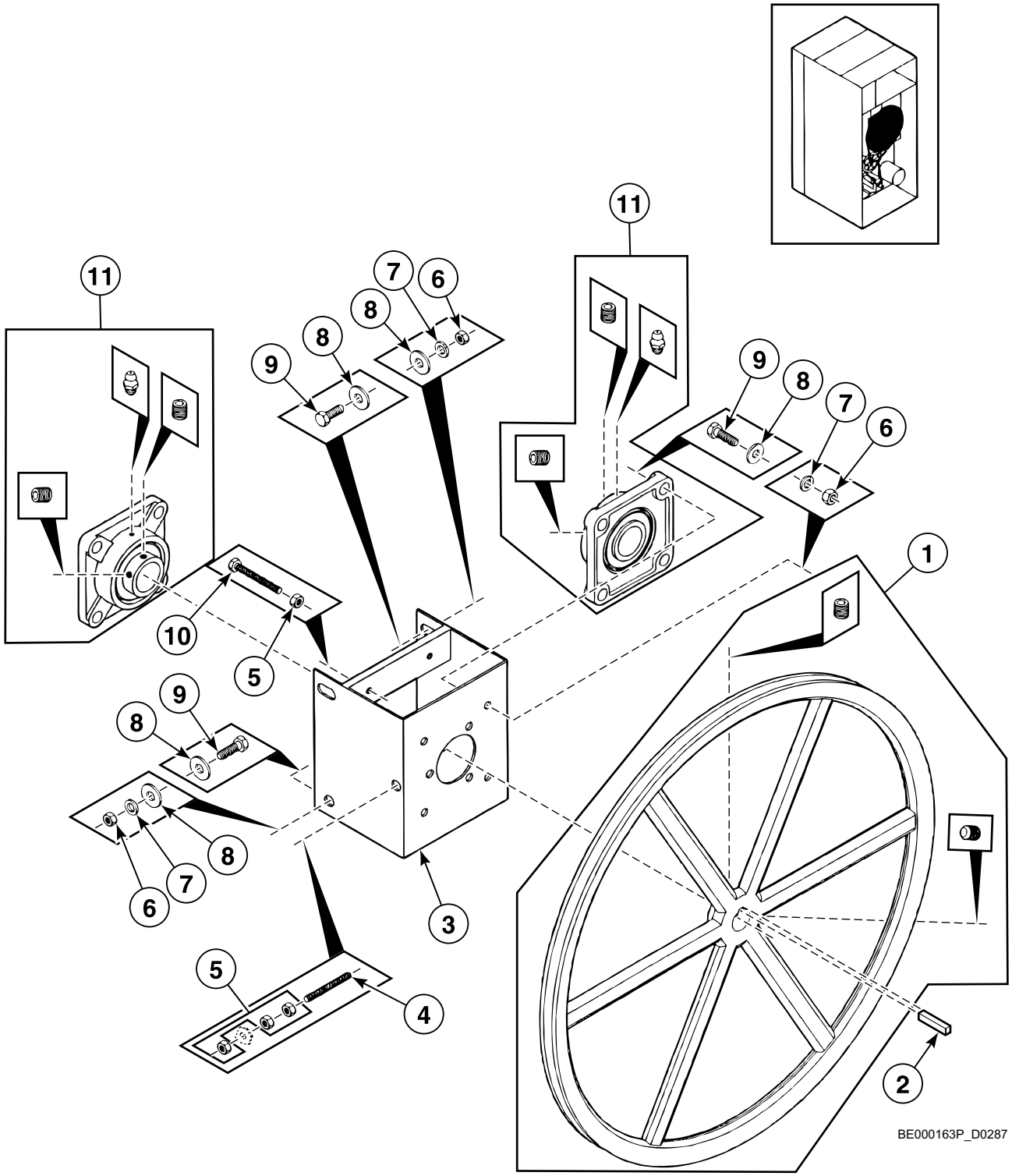

© Copyright, Alliance Laundry Systems LLC – DO NOT COPY or TRANSMIT

Drum Drive - DR30 Models

REF	PART NO.	DESCRIPTION	COMMENTS
1	254/DA000/519	Belt Pulley	
2	254/TU005/881	Key	
3	254/DSA00/728	Bearing	
4	254/SB000/876	Wiring Rod	
5	254/C0000/249	Nut	
6	254/TU004/787	Nut	
7	254/VSB00/134	Washer	
8	254/IB000/140	Washer	
9	254/IB000/139	Bolt	
10	254/SB000/935	Bolt	
11	254/DA000/421	Ball Bearing	

© Copyright, Alliance Laundry Systems LLC – DO NOT COPY or TRANSMIT

Drum Drive - DR50 and DR75 Models

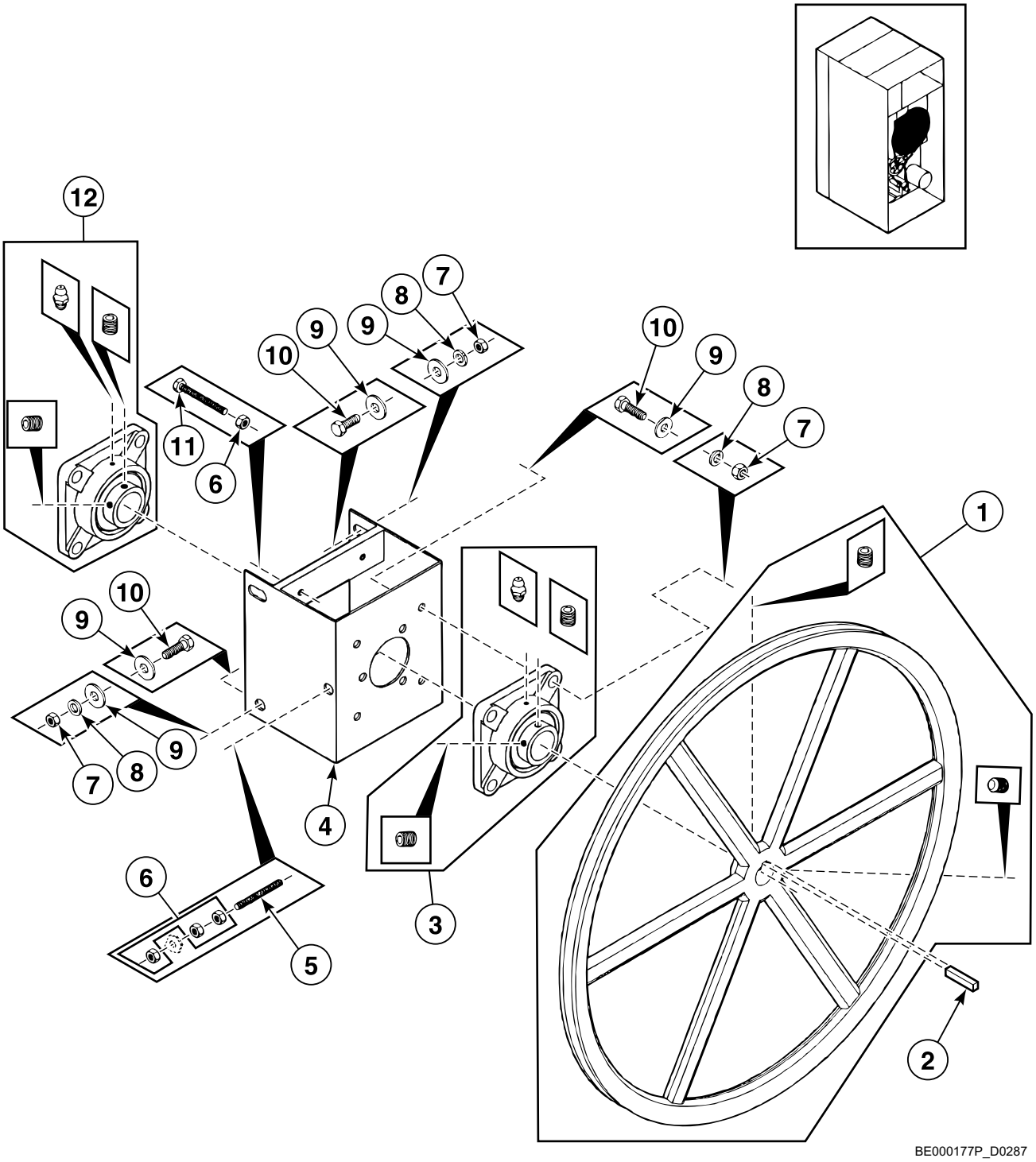

© Copyright, Alliance Laundry Systems LLC – DO NOT COPY or TRANSMIT

Drum Drive - DR50 and DR75 Models

REF	PART NO.	DESCRIPTION	COMMENTS
1	254/DA011/899	Belt Pulley	
2	254/DA011/914	Key	
3	254/DA000/421	Ball Bearing	
4	254/DSA00/728	Bearing	Model DR50
	254/DSA00/719	Bearing	Model DR75
5	254/SB000/876	Wiring Rod	
6	254/C0000/249	Nut	
7	254/TU004/787	Nut	
8	254/VSB00/134	Washer	
9	254/IB000/140	Washer	
10	254/IB000/139	Bolt	
11	254/SB000/935	Bolt	
12	254/DA000/421	Ball Bearing	Model DR50
	254/DA000/423	Ball Bearing	Model DR75

© Copyright, Alliance Laundry Systems LLC – DO NOT COPY or TRANSMIT

Drum Drive and Reduction - DR20 and DR30 Models

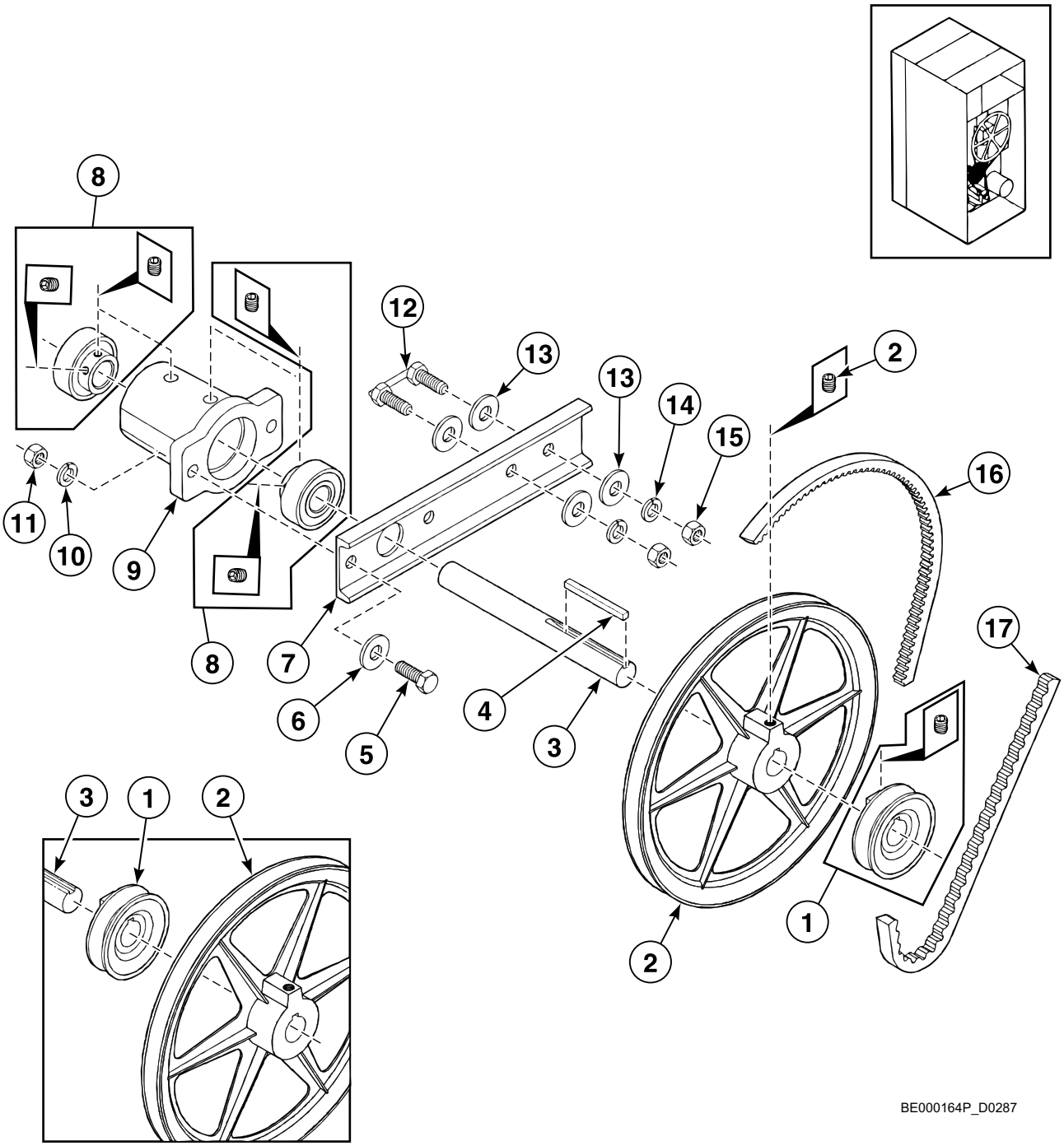

© Copyright, Alliance Laundry Systems LLC – DO NOT COPY or TRANSMIT

Drum Drive and Reduction - DR20 and DR30 Models

REF	PART NO.	DESCRIPTION	COMMENTS
1	254/DA000/530	Pulley	
2	254/DA000/531	Pulley	
3	254/DA011/711	Idler Shaft	
4	254/TUD00/187	Key	
5	254/FB000/124	Bolt	
6	254/VSB00/130	Washer	
7	254/CA011/866	Mounting Bracket	
8	254/DA000/518	Bearing	
9	254/DA000/517	Pulley Housing	
10	254/TU002/814	Washer	
11	254/C0000/249	Nut	
12	254/DSA00/734	Bolt	Set of 2 with axis
13	254/IB000/140	Washer	
14	254/VSB00/134	Washer	
15	254/TU004/787	Nut	
16	254/DA000/521	Belt	
17	254/DA000/523	Belt	Model DR30
	254/DA000/522	Belt	Model DR20

© Copyright, Alliance Laundry Systems LLC – DO NOT COPY or TRANSMIT

Drum Drive and Reduction

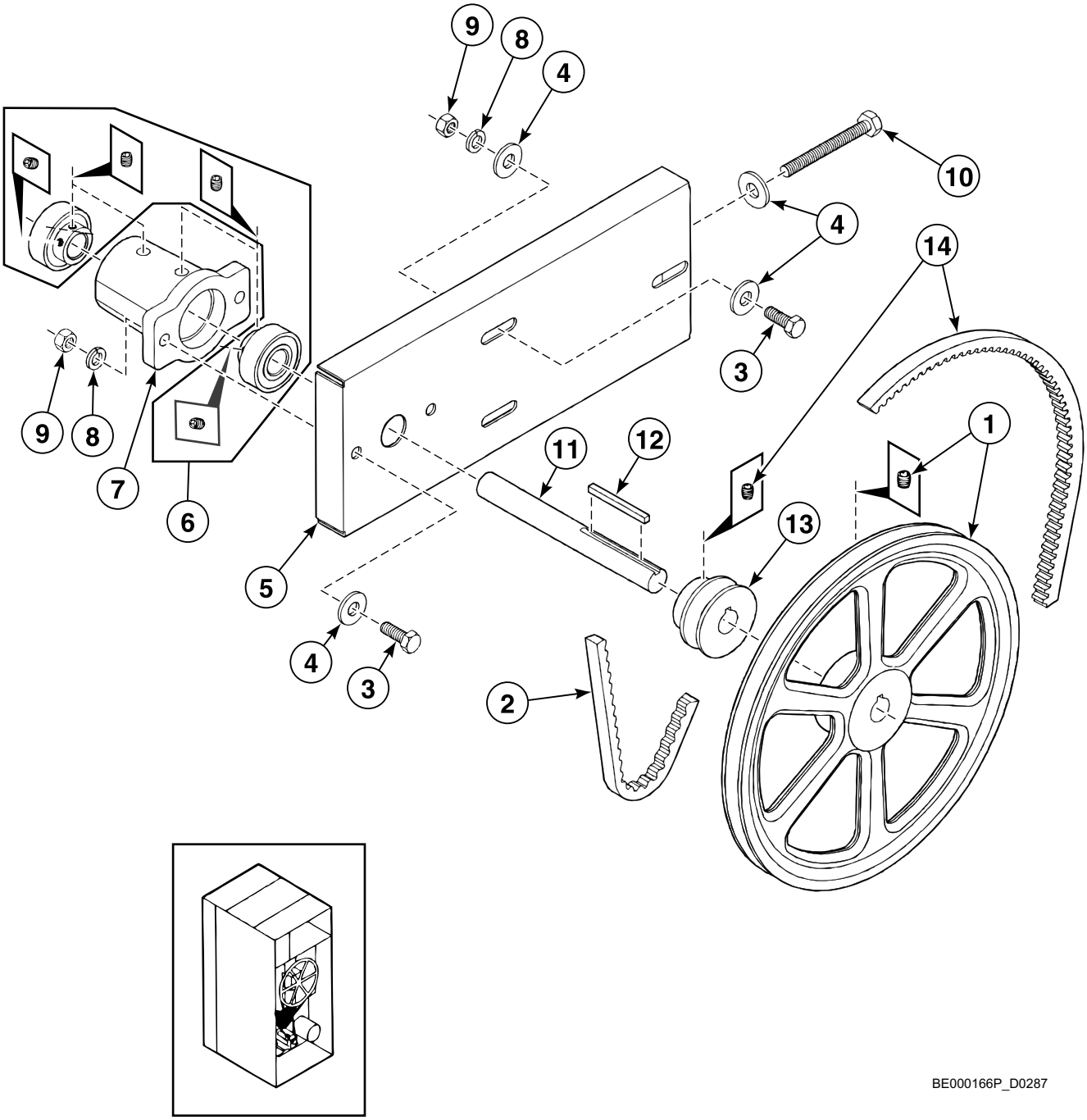

© Copyright, Alliance Laundry Systems LLC – DO NOT COPY or TRANSMIT

Drum Drive and Reduction

REF	PART NO.	DESCRIPTION	COMMENTS
1	254/DA000/529	Pulley	Models DR50 and DR75
	254/DA000/531	Pulley	Models DR20 and DR30
2	254/DA000/523	Belt	Models DR30 and DR50; Reversing
	254/DA000/522	Belt	Model DR20
	254/DA000/497	Belt	Models DR50 and DR75; Reversing and non-reversing
	254/DA000/494	Belt	Model DR50; Non-reversing
	254/DA000/525	Belt	Model DR75; Non-reversing
	254/DA011/908	Belt	Model DR75; Reversing
3	254/FB000/124	Bolt	
4	254/VSB00/130	Washer	
5	254/CA012/059	Plate Assembly	
6	254/DA000/518	Bearing	
7	254/DA000/517	Pulley Housing	
8	254/TU002/814	Washer	
9	254/C0000/249	Nut	
10	254/SB000/935	Bolt	
11	254/DA011/711	Idler Shaft	
12	254/TUD00/187	Key	
13	254/DA000/528	Pulley	Models DR50 and DR75
	254/DA000/530	Pulley	Models DR20 and DR30
14	254/DA000/521	Belt	

© Copyright, Alliance Laundry Systems LLC – DO NOT COPY or TRANSMIT

Motor, Fan and Drum Drive - DR20 and DR30 Models

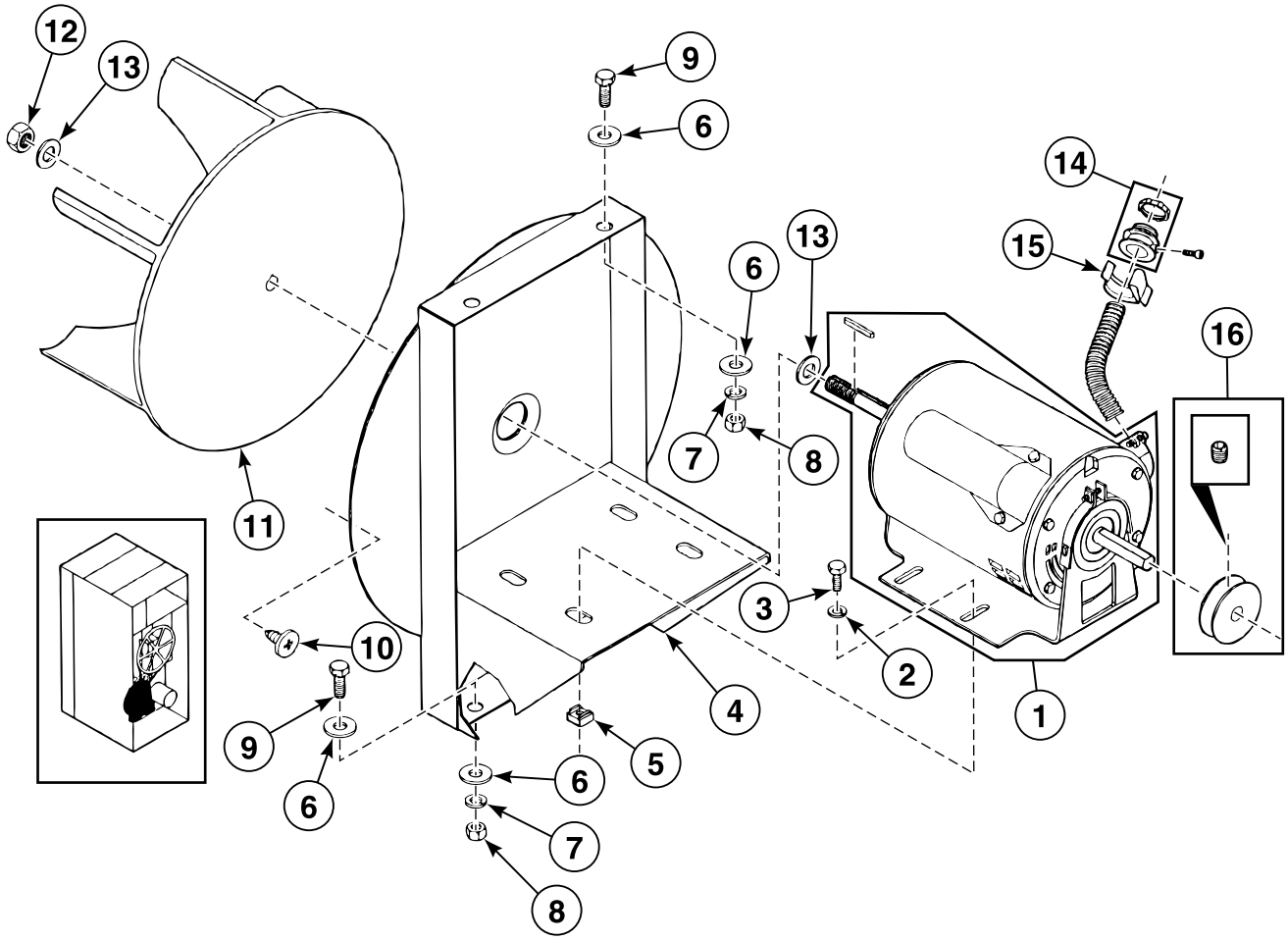

BE000165P_D0287

© Copyright, Alliance Laundry Systems LLC – DO NOT COPY or TRANSMIT

Motor, Fan and Drum Drive - DR20 and DR30 Models

REF	PART NO.	DESCRIPTION	COMMENTS
1	254/DA000/424	Motor Assembly	240-415 Volt
	254/DA000/428	Motor Assembly	115-220 Volt
2	254/TU002/814	Washer	
3	254/FB000/124	Bolt	
4	254/DSA00/703	Motor Plate Assembly	Model DR20
	254/DSA00/704	Motor Plate Assembly	Model DR30
5	254/SB000/842	Clipnut	
6	254/IB000/140	Washer	
7	254/VSB00/134	Washer	
8	254/TU004/787	Nut	
9	254/TU003/246	Bolt	
10	254/SB000/836	Screw	
11	254/DSA00/773	Fan	Model DR30
	254/DSA00/772	Fan	Model DR20
12	254/SB000/813	Nut	
13	254/SB000/847	Washer	
14	254/EA000/211	Tube Connector	
15	254/EA000/648	Tube Connector	
16	254/DA000/508	Pulley	Model DR30; 50 Hertz
	254/DA000/510	Pulley	Model DR20; 50 Hertz
	254/DA000/516	Pulley	Model DR20; 60 Hertz
	254/DA000/509	Pulley	Model DR30; 60 Hertz

© Copyright, Alliance Laundry Systems LLC – DO NOT COPY or TRANSMIT

Motor, Fan and Drum Drive

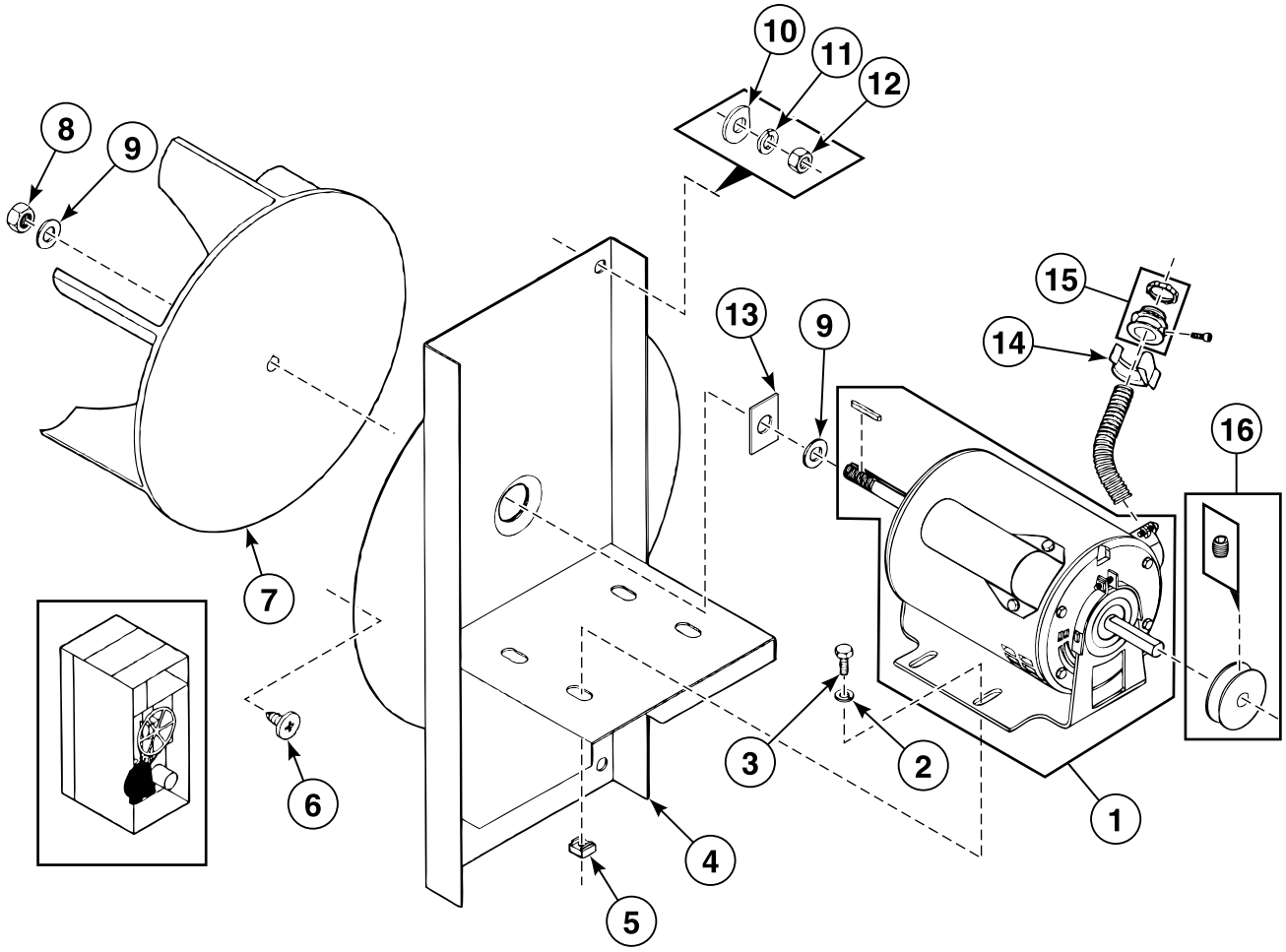

BE000303P_D0287

© Copyright, Alliance Laundry Systems LLC – DO NOT COPY or TRANSMIT

Motor, Fan and Drum Drive

REF	PART NO.	DESCRIPTION	COMMENTS
1	254/DA000/424	Motor Assembly	240-415 Volt
	254/DA000/428	Motor Assembly	115-220 Volt
	254/DA011/907	Motor Assembly	Models DR50 and DR75; 240 Volt
2	254/TU002/814	Washer	Models DR20 and DR30
	254/TU005/439	Bolt	Models DR50 and DR75
3	254/FB000/124	Bolt	Models DR20 and DR30
	254/TU002/814	Washer	Models DR50 and DR75
4	254/DSA00/799	Motor Plate Assembly	Model DR20
	254/DSA00/801	Motor Plate Assembly	Model DR30
	254/DSA00/793	Motor Plate Assembly	Models DR50 and DR75
5	254/SB000/842	Clipnut	
6	254/SB000/836	Screw	
7	254/DSA00/773	Fan	Models DR30, DR50 and DR75
	254/DSA00/772	Fan	Model DR20
8	254/SB000/813	Nut	
9	254/SB000/847	Washer	
10	254/IB000/140	Washer	
11	254/VSB00/134	Washer	
12	254/TU004/787	Nut	
13	254/DA000/460	Dust Cover	
14	254/EA000/648	Tube Connector	
15	254/EA000/211	Tube Connector	
16	254/DA011/919	Pulley	Model DR20; 50 Hertz
	254/TU014/689	Pulley	Model DR30; 50 Hertz
	254/DA000/516	Pulley	Model DR20; 60 Hertz
	254/DA000/509	Pulley	Model DR30; 60 Hertz

© Copyright, Alliance Laundry Systems LLC – DO NOT COPY or TRANSMIT

Motor Fan

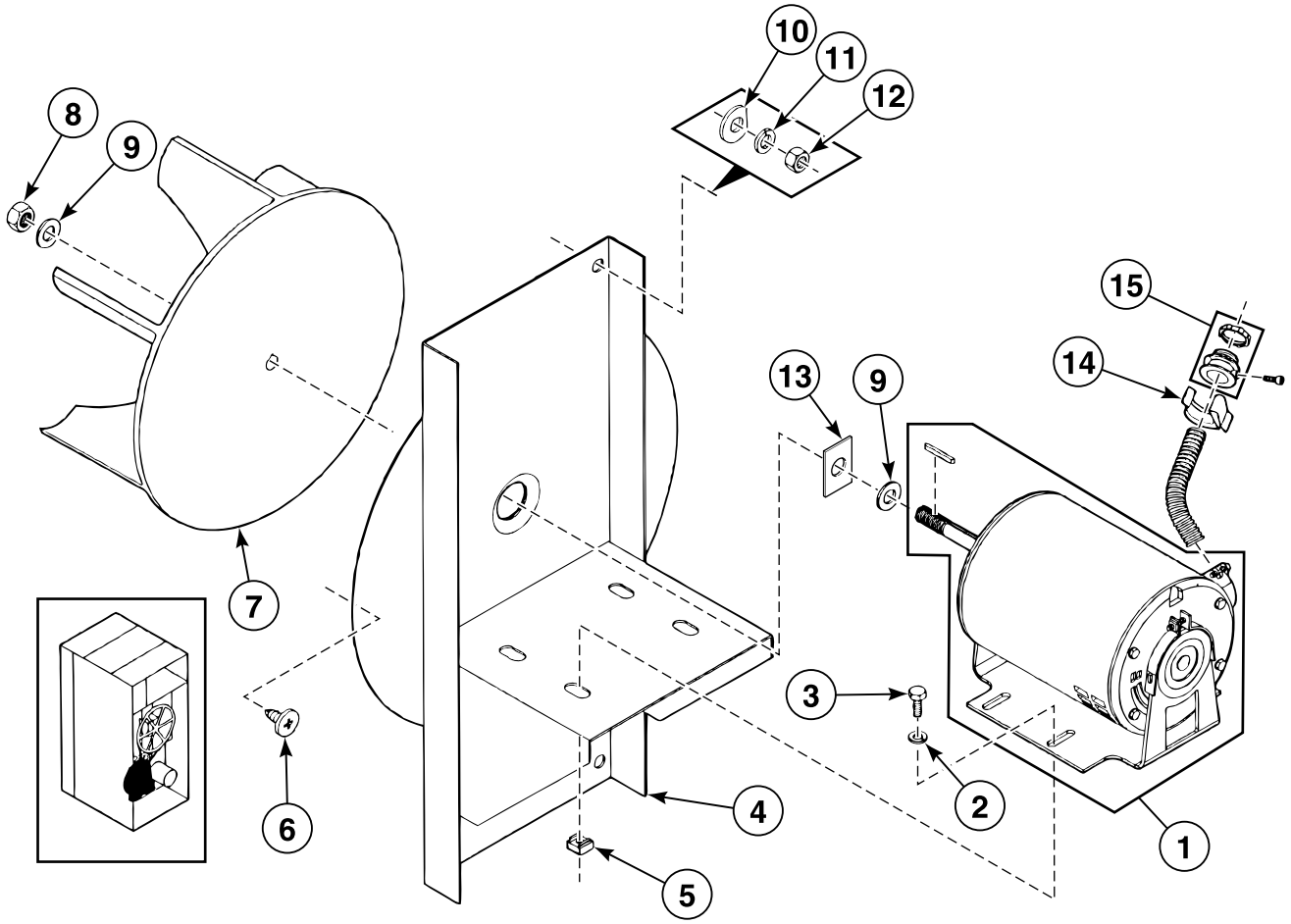

BE000179P_D0287

© Copyright, Alliance Laundry Systems LLC – DO NOT COPY or TRANSMIT

Motor Fan

REF	PART NO.	DESCRIPTION	COMMENTS
	254/00036/00	Telem	Models DR20 and DR30
	209/00284/00	Protector	Models DR20 and DR30
1	254/DA011/907	Motor Assembly	
2	254/TU002/814	Washer	
3	254/FB000/124	Bolt	Models DR20 and DR30
	254/TU005/439	Bolt	Models DR50 and DR75
4	254/DSA00/799	Motor Plate Assembly	Models DR20 and DR30
	254/DSA00/793	Motor Plate Assembly	Models DR50 and DR75
5	254/SB000/842	Clipnut	
6	254/SB000/836	Screw	
7	254/DSA00/772	Fan	Model DR20
	254/DSA00/773	Fan	Models DR30, DR50 and DR75
8	254/SB000/813	Nut	
9	254/SB000/847	Washer	
10	254/IB000/140	Washer	
11	254/VSB00/134	Washer	
12	254/TU004/787	Nut	
13	254/DA000/460	Dust Cover	Models DR50 and DR75
14	254/EA000/648	Tube Connector	
15	254/EA000/211	Tube Connector	

© Copyright, Alliance Laundry Systems LLC – DO NOT COPY or TRANSMIT

Motor Drive

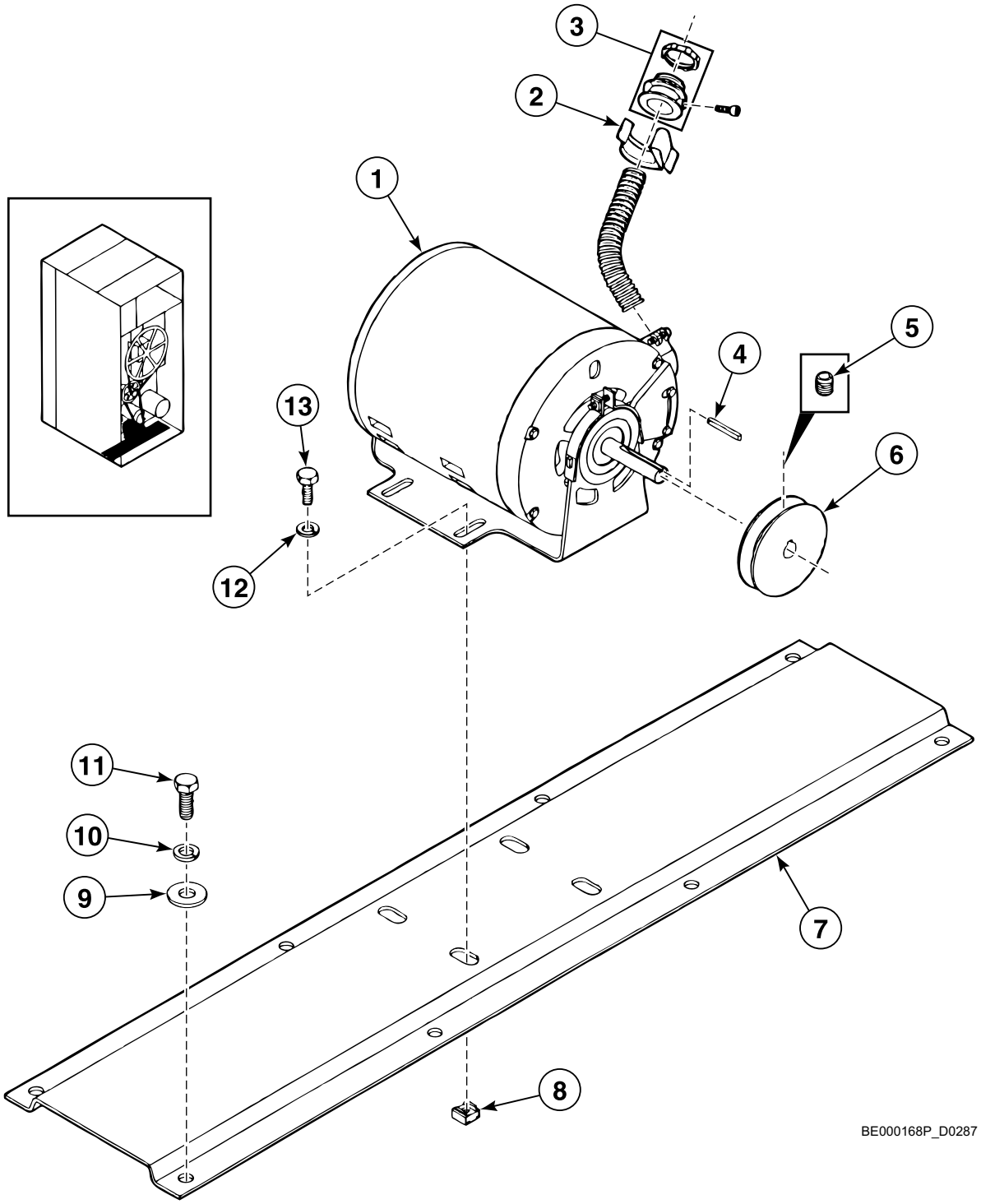

© Copyright, Alliance Laundry Systems LLC – DO NOT COPY or TRANSMIT

Motor Drive

REF	PART NO.	DESCRIPTION	COMMENTS
1	254/DA011/909	Motor	
2	254/EA000/648	Tube Connector	
3	254/EA000/211	Tube Connector	
4	254/DA000/512	Pulley	2.50-5/8 inch
	254/TU014/690	Pulley	Models DR20 and DR30; 2.20-5/8 inch
	254/DA011/913	Pulley	Models DR20 and DR30; 2.00-5/8 inch
	254/DA000/513	Pulley	Models DR50 and DR75; 60 Hertz; 3.00-5/8 inch
	254/DA011/906	Pulley	Models DR50 and DR75; 50 Hertz; 2.80-5/8 inch
5	254/00044/00	Mounting Plate	Model DR20
	254/00045/00	Mounting Plate	Model DR30
6	254/SB000/842	Clipnut	Models DR20 and DR30
7	254/IB000/140	Washer	Models DR20 and DR30
8	254/VSB00/134	Washer	Models DR20 and DR30
9	254/TU003/246	Bolt	Models DR20 and DR30
10	254/TU002/814	Washer	
11	254/FB000/124	Bolt	

© Copyright, Alliance Laundry Systems LLC – DO NOT COPY or TRANSMIT

Electric Junction Box (Drawing 1 of 2)

Gas Models

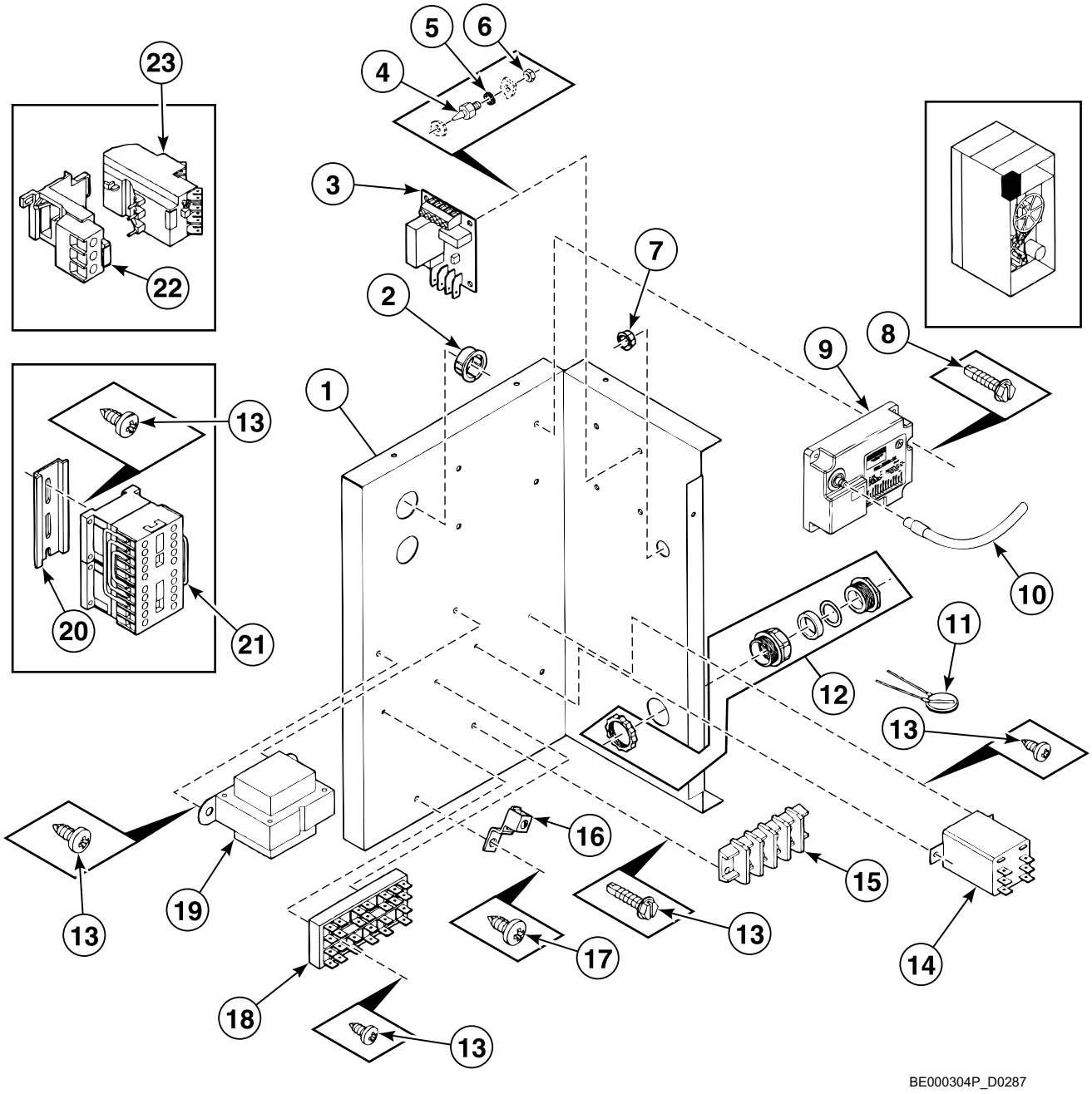

© Copyright, Alliance Laundry Systems LLC – DO NOT COPY or TRANSMIT

Electric Junction Box (Drawing 1 of 2)

REF	PART NO.	DESCRIPTION	COMMENTS
1	254/CA011/935	Mounting Plate	
2	254/SB000/868	Duct	
3	209/00438/00	Central Control Board	240 Volt
	209/00471/00	Central Control Board	24 Volt
4	211/00120/00	Standoff	
5	203/00006/00	Washer	
6	204/00007/00	Nut	
7	254/SB000/867	Duct	
8	254/TU002/793	Screw	
9	254/GA011/007	Ignition Module	
10	254/GA000/803	Cable	
11	254/EA000/651	Relay	
12	211/00117/00	Cordlock	
	720/00094/02	Cordlock	
13	254/TU007/733	Screw	
14	254/EA000/647	Relay	
15	254/EA000/467	Terminal Block	
16	254/EA000/466	Terminal	
17	254/SB000/836	Screw	
18	254/ESA00/843	Jumper	
19	254/ESA00/857	Transformer	
20	720/00110/01	Rail	
21	254/EA000/685	Contactor	
22	254/00036/00	Telem	
23	209/00284/00	Protector	

© Copyright, Alliance Laundry Systems LLC – DO NOT COPY or TRANSMIT

Electric Junction Box (Drawing 2 of 2)

Steam and Electric Models

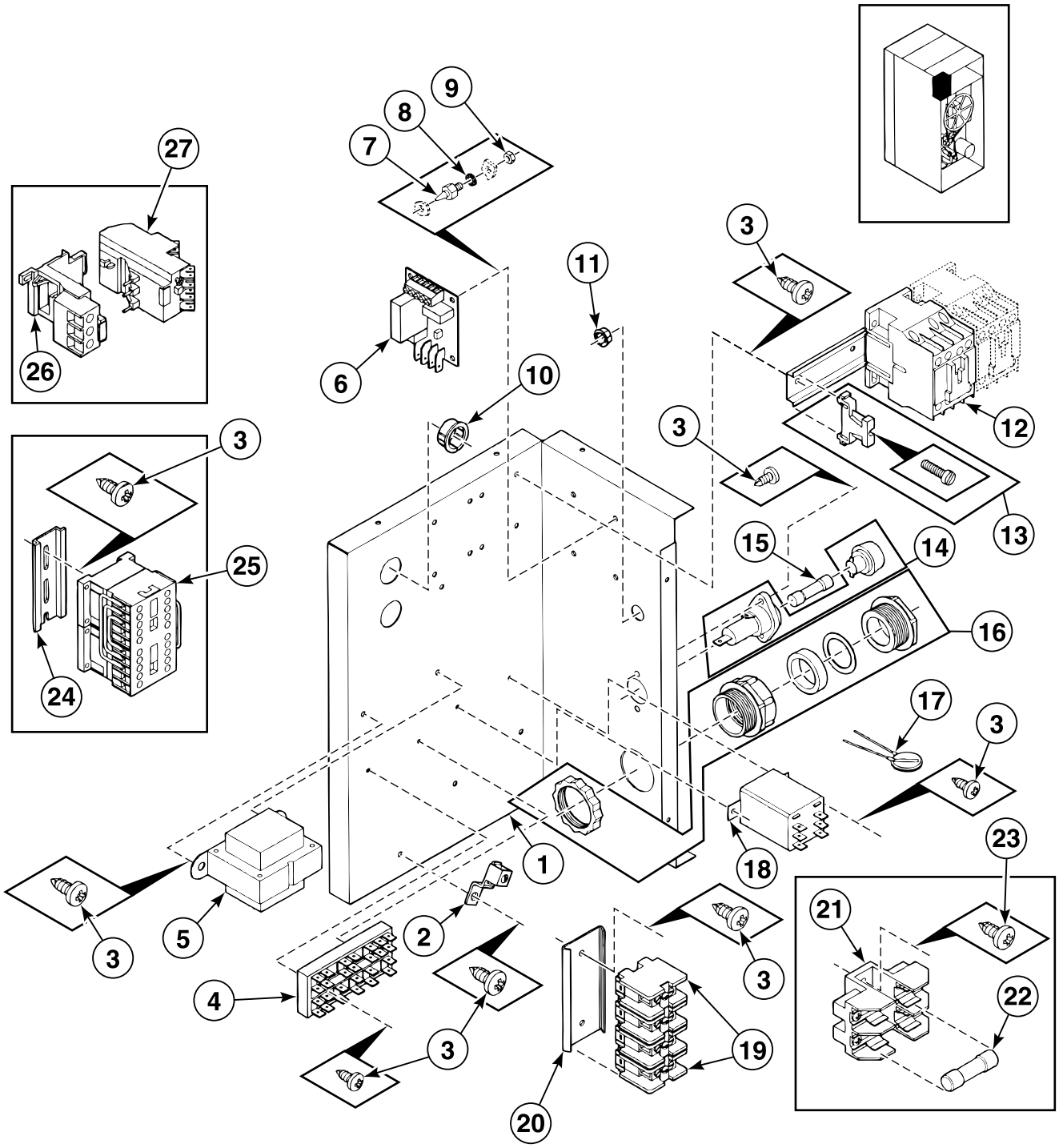

BE000170P_D0287

© Copyright, Alliance Laundry Systems LLC – DO NOT COPY or TRANSMIT

Electric Junction Box (Drawing 2 of 2)

REF	PART NO.	DESCRIPTION	COMMENTS
1	254/CA011/935	Mounting Plate	
2	254/EA000/466	Terminal	
3	254/TU007/733	Screw	
4	254/ESA00/843	Jumper	
5	254/ESA00/857	Transformer	
6	209/00438/00	Central Control Board	
7	211/00120/00	Standoff	
8	203/00006/00	Washer	
9	204/00007/00	Nut	
10	254/SB000/868	Duct	
11	254/SB000/867	Duct	
12	254/00022/00	Contactor	
	254/00023/00	Contactor	
13	209/00319/00	Clamp	
14	254/EA000/682	Fuse Holder	
15	254/EA000/683	Fuse	
16	211/00097/00	Cordlock	
	720/00094/02	Cordlock	
17	209/00356/00	Noise Suppressor	
18	254/EA000/647	Relay	
19	254/EA000/551	Clamp	
20	254/EA000/550	Rail	
21	254/EA000/460	Fuse Holder	
22	254/EA000/457	Fuse	
23	254/SB000/836	Screw	
24	720/00110/01	Rail	
25	254/EA000/685	Contactor	
26	254/00036/00	Telem	
27	209/00284/00	Protector	

© Copyright, Alliance Laundry Systems LLC – DO NOT COPY or TRANSMIT

Gas Heating System - DR20 and DR30 Models

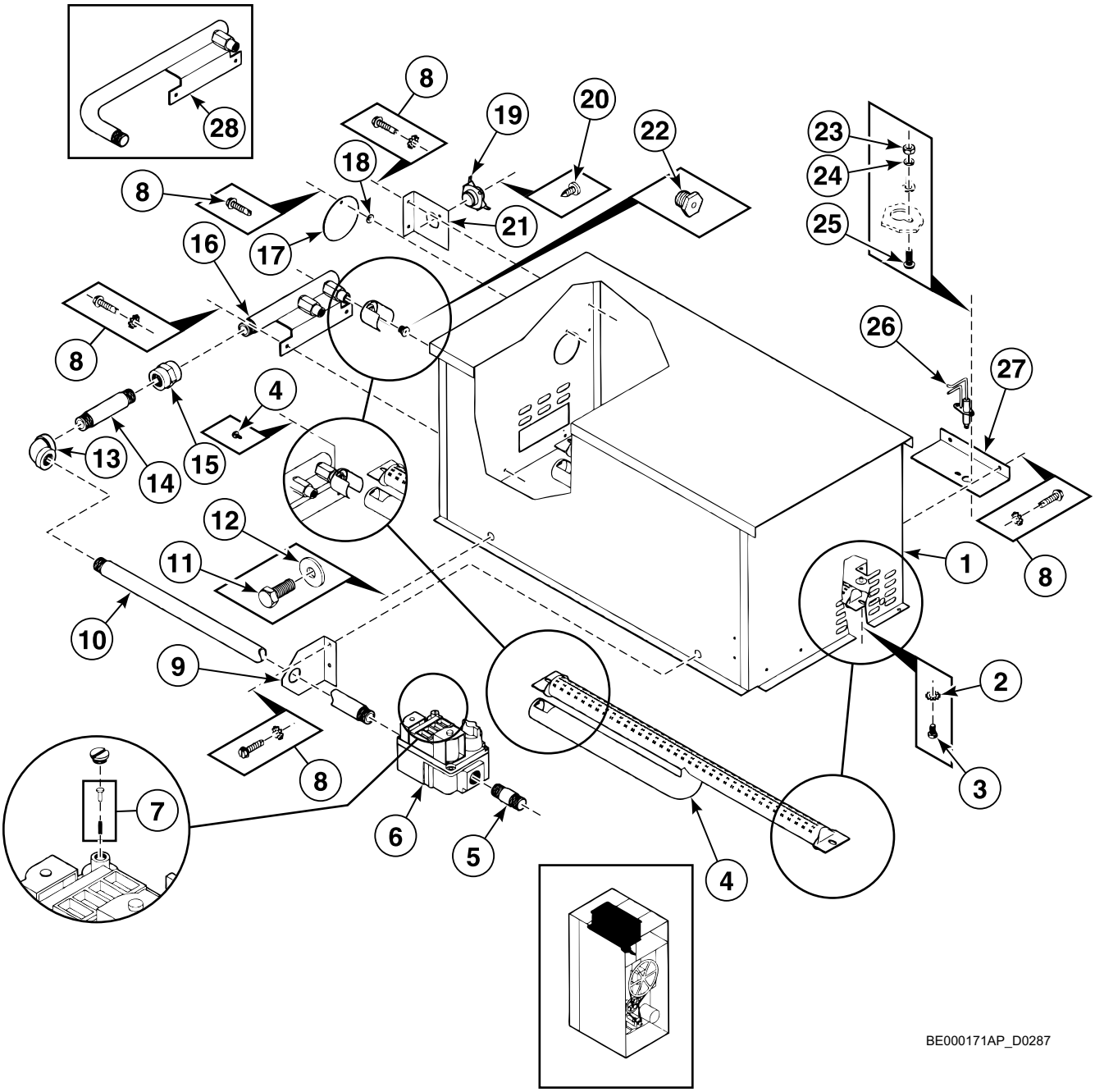

© Copyright, Alliance Laundry Systems LLC – DO NOT COPY or TRANSMIT

Gas Heating System - DR20 and DR30 Models

REF	PART NO.	DESCRIPTION	COMMENTS
1	254/GSA00/250	Burner Housing	Model DR20
	254/GSA00/255	Burner Housing	Model DR30
2	254/TU011/613	Washer	
3	254/SB000/831	Bolt	
4	254/GA000/739	Burner	Model DR20
	254/GA000/756	Burner	Model DR30
5	254/OP000/290	Gas Valve	Model DR20
	254/LB000/020	Gas Valve	Model DR30
6	254/GA000/770	Gas Valve	
7	254/00038/00	Connector	
8	254/TU002/793	Screw	
9	254/CA011/818	Gas Pipe	
10	254/TU013/217	Gas Pipe	Model DR20
	254/FG000/274	Gas Pipe	Model DR30
11	254/FB000/124	Bolt	
12	254/TU002/814	Washer	
13	254/39050/105	Elbow	
14	254/OP000/308	Gas Pipe	
15	254/GA000/746	Gas Pipe	
16	254/GA000/760	Connection Pipe	
17	254/CA010/541	Inspection Hole	
18	254/SB000/853	Washer	
19	254/EA000/245	Safety Thermostat	
20	254/TU007/733	Screw	
21	254/CA011/028	Thermostat	
22	254/GA761/147	Gas Orifice	Model DR20; No. 26
	254/GA761/129	Gas Orifice	Model DR30; No. 30
	254/GA761/120	Gas Orifice	Model DR30; No. 31
	254/GA761/086	Gas Orifice	Model DR20; No. 44
	254/GA761/081	Gas Orifice	Model DR30; No. 46
23	254/TU003/266	Nut	
24	254/AT000/368	Washer	
25	254/M0000/262	Screw	
26	254/GA011/002	Gas Ignition	
27	254/GA010/457	Bracket	
28	254/GSA00/507	Bracket	

© Copyright, Alliance Laundry Systems LLC – DO NOT COPY or TRANSMIT

Gas Heating System - DR50 and DR75 Models

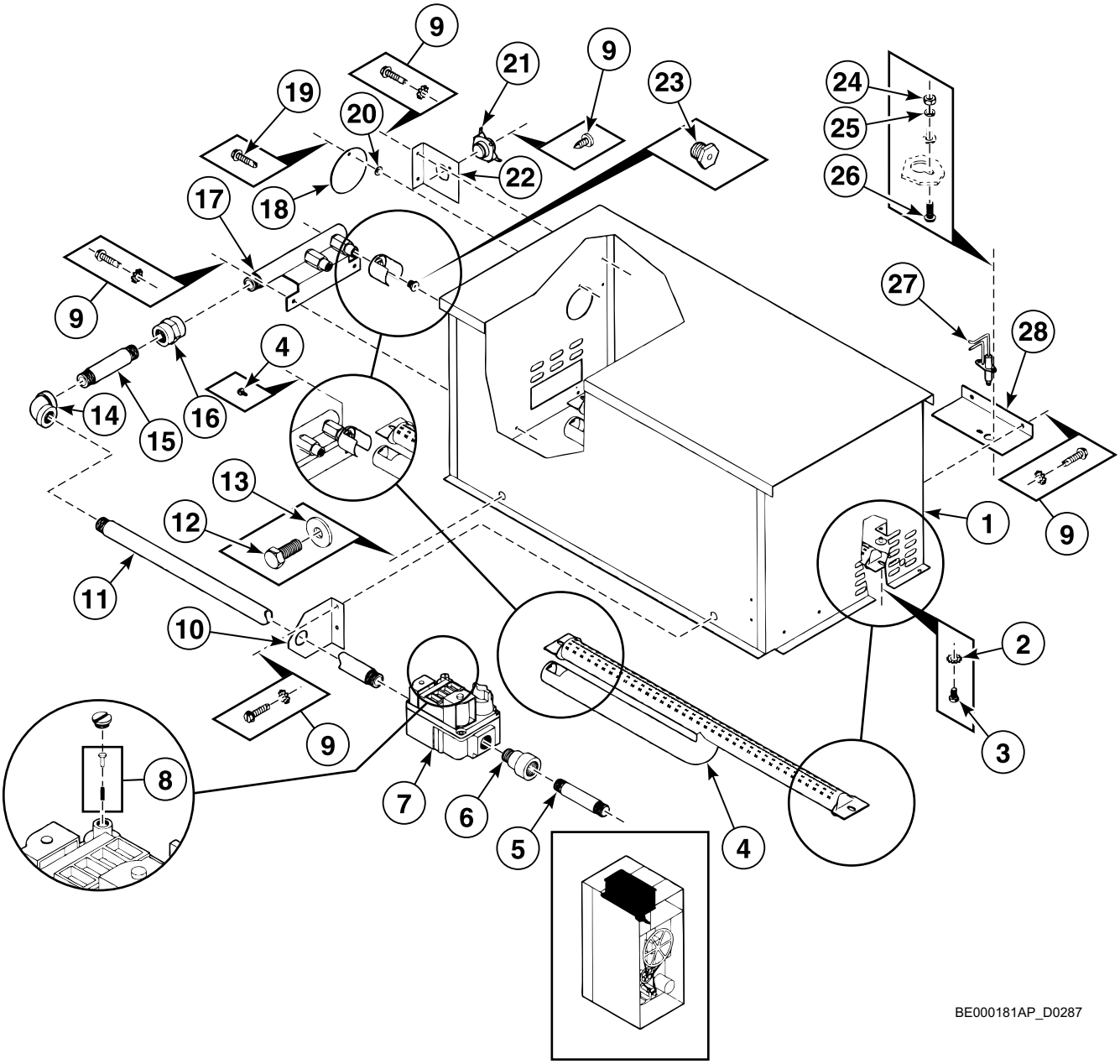

© Copyright, Alliance Laundry Systems LLC – DO NOT COPY or TRANSMIT

Gas Heating System - DR50 and DR75 Models

REF	PART NO.	DESCRIPTION	COMMENTS
1	254/GSA00/255	Burner Housing	Model DR50
	254/GSA00/767	Burner Housing	Model DR75
2	254/TU011/613	Washer	
3	254/SB000/831	Bolt	
4	254/GSA00/756	Burner	
5	254/OP000/308	Gas Pipe	Model DR50
	254/TU004/601	Gas Pipe	Model DR75
6	254/CA013/099	Gas Reducer	
7	254/GA000/770	Gas Valve	
8	254/00038/00	Connector	
9	254/TU007/733	Screw	
10	254/CA011/818	Gas Pipe	
11	254/TU007/358	Gas Pipe	
12	254/TU005/439	Bolt	
13	254/VSB00/130	Washer	
14	254/39050/105	Elbow	
15	254/OP000/296	Gas Pipe	Model DR75
	254/OP000/308	Gas Pipe	Model DR50
16	254/GA000/746	Gas Pipe	
17	254/GSA00/508	Connection Pipe	Model DR50
	254/GSA00/509	Connection Pipe	Model DR75
18	254/CA010/541	Inspection Hole	
19	254/TU002/793	Screw	
20	254/SB000/853	Washer	
21	254/EA000/245	Safety Thermostat	
22	254/CA011/028	Thermostat	
23	254/GA761/140	Gas Orifice	3.5; No. 9/16
	254/GA761/078	Gas Orifice	2; No. 5/64
	254/GA761/157	Gas Orifice	Model DR50; 4; No. 22
	254/GA761/089	Gas Orifice	Model DR50; 2.3; No. 43
24	254/TU003/266	Nut	
25	254/AT000/368	Washer	
26	254/M0000/262	Screw	
27	257/GA011/003	Electrode	
28	254/GA010/457	Bracket	

© Copyright, Alliance Laundry Systems LLC – DO NOT COPY or TRANSMIT

Electric Heating System

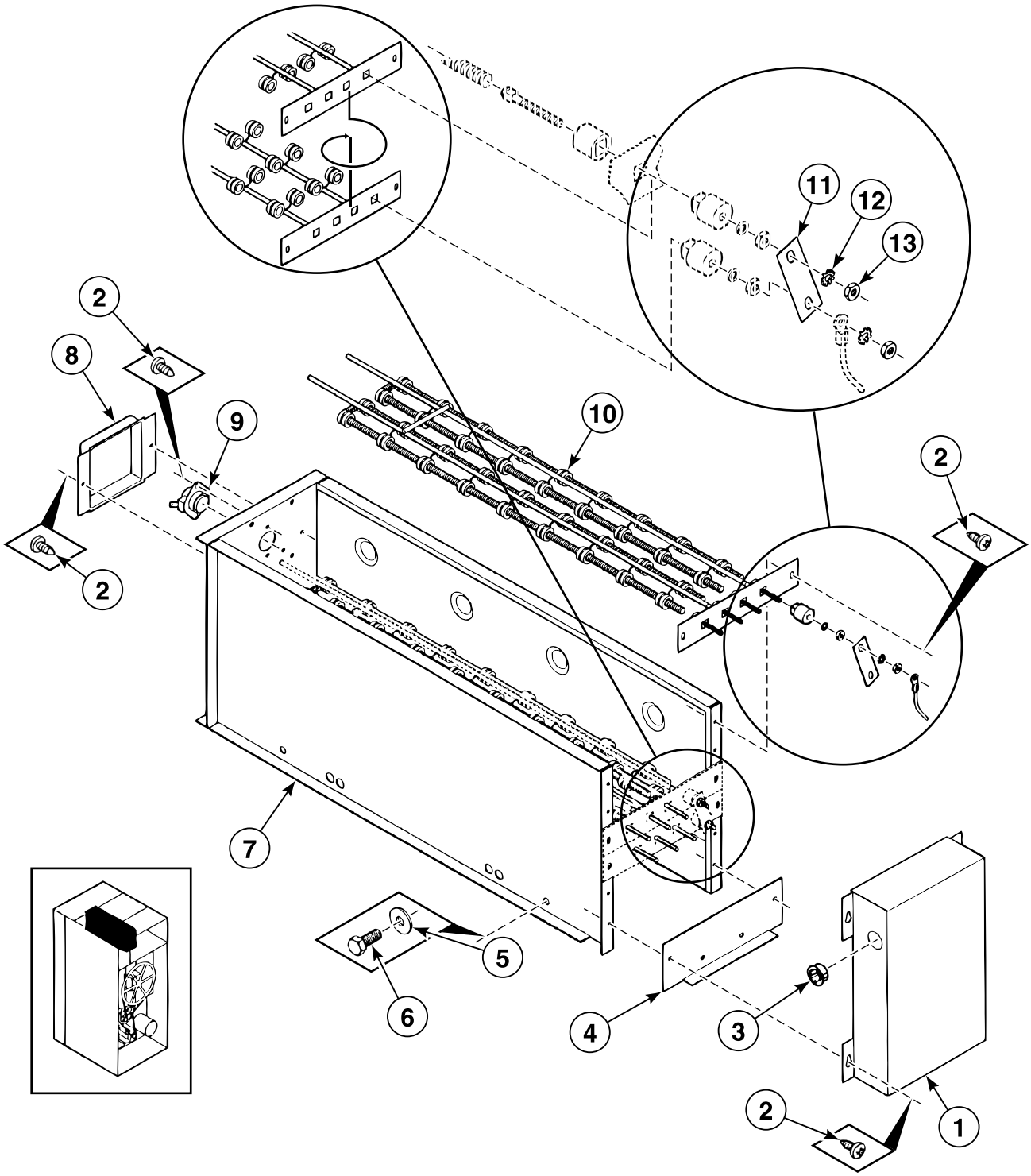

© Copyright, Alliance Laundry Systems LLC – DO NOT COPY or TRANSMIT

Electric Heating System

REF	PART NO.	DESCRIPTION	COMMENTS
	254/ESA00/316	Adapter	Models DR20 and DR30
1	254/CA011/984	Cap	
2	254/TU007/733	Screw	
3	254/SB000/868	Duct	
4	254/EA010/714	Plate Assembly	Models DR20 and DR30
	254/EA011/613	Plate Assembly	Models DR50 and DR75
5	254/VSB00/130	Washer	
6	254/SB000/935	Bolt	Models DR20 and DR30
	254/TU005/439	Bolt	Models DR50 and DR75
7	254/ESA00/610	Heating Cover	
8	254/EA000/595	Cap	Models DR20 and DR30
	254/EA010/232	Cap	Models DR50 and DR75
9	254/EA000/243	Safety Thermostat	
10	254/EA000/472	Heating Element	
11	254/EA010/417	Jumper	
12	254/TU011/613	Washer	
13	254/TU002/842	Nut	

© Copyright, Alliance Laundry Systems LLC – DO NOT COPY or TRANSMIT

Steam Heating System

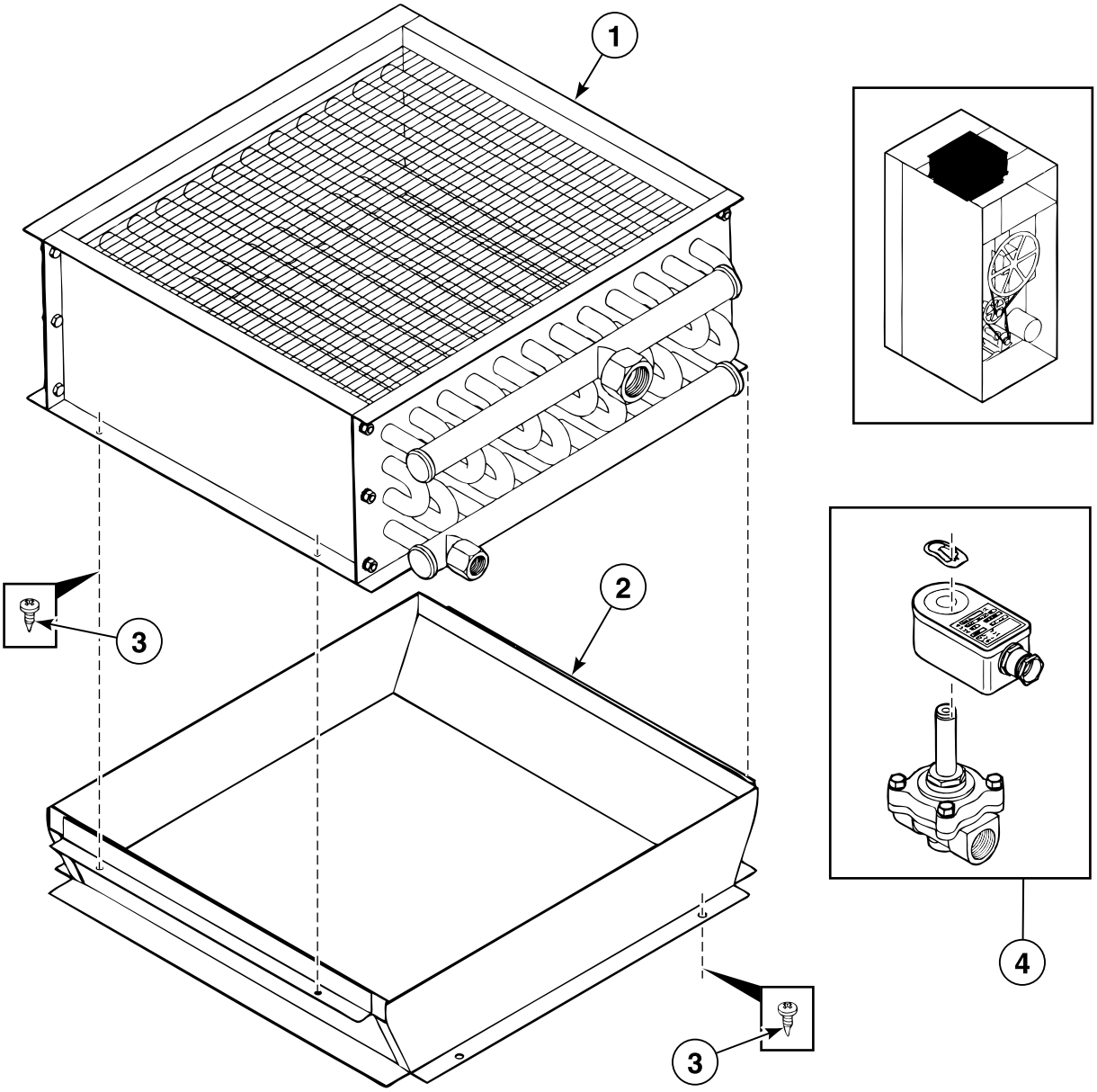

BE000173AP_D0287

© Copyright, Alliance Laundry Systems LLC – DO NOT COPY or TRANSMIT

Steam Heating System

REF	PART NO.	DESCRIPTION	COMMENTS
1	254/00027/00	Steam Battery	Model DR20
	254/00028/00	Steam Battery	Model DR30
	254/00029/00	Steam Battery	Models DR50 and DR75
2	254/00037/00	Support Bracket	Model DR20
	254/00046/00	Support Bracket	Model DR30
	254/00047/00	Support Bracket	Models DR50 and DR75
3	254/TU007/733	Screw	
4	209/00185/00	Steam Valve	

© Copyright, Alliance Laundry Systems LLC – DO NOT COPY or TRANSMIT

Notes

© Copyright, Alliance Laundry Systems LLC – DO NOT COPY or TRANSMIT

Parts Index

A

Adapter
254/ESA00/316 71

Air Channel Drum
254/CA011/991 5
254/CA012/070 5
254/CA013/026 5
254/CA013/047 5
254/CA013/083 5
254/CA013/095 5

Air Valve
254/CA011/853 43

Airflow Switch
254/EA000/618 43

Axle
254/CA010/085 11

B

Back Panel
254/CA011/937 41
254/CA011/975 41
254/CA012/016 41
254/CA013/018 41

Ball Bearing
254/DA000/420 45
254/DA000/421 ..... 47, 49
254/DA000/423 49

Bar Drum
254/DA000/418 35

Bearing
254/DA000/518 ..... 51, 53
254/DSA00/690 45
254/DSA00/719 49
254/DSA00/728 ..... 47, 49

Belt
254/DA000/494 53
254/DA000/497 53
254/DA000/521 ..... 51, 53
254/DA000/522 ..... 51, 53
254/DA000/523 ..... 51, 53
254/DA000/525 53
254/DA011/908 53

Belt Pulley
254/DA000/519 ..... 45, 47
254/DA011/899 49

Bolt
254/CB000/036 5
254/DA000/445 37
254/DA011/248 39
254/DA011/249 39
254/DSA00/734 51
254/FB000/124 ..... 45, 51, 53, 55, 57, 59, 61, 67
254/IB000/139 ..... 45, 47, 49
254/SB000/831 ..... 67, 69
254/SB000/898 ..... 21, 23, 25, 27, 29, 31, 33
254/SB000/935 ..... 45, 47, 49, 53, 71
254/SB000/982 15
254/TU003/246 ..... 55, 61
254/TU005/439 ..... 35, 37, 39, 57, 59, 69, 71

Bracket
254/CA011/854 43
254/GA010/457 ..... 67, 69
254/GSA00/507 67

Burner
254/CA011/763 5
254/CA011/764 5
254/GA000/739 67
254/GA000/756 67
254/GSA00/756 69

Burner Housing
254/GSA00/250 67
254/GSA00/255 ..... 67, 69
254/GSA00/767 69

C

Cable
254/GA000/803 63

Cap
254/CA000/617 11
254/CA011/984 71
254/EA000/595 71
254/EA010/232 71

Central Control Board
209/00438/00 ..... 63, 65
209/00471/00 63

Clamp
209/00319/00 65
254/EA000/551 65

Clean Lint Screen Label
254/00019/00 19

Clipnut
254/SB000/842 ..... 55, 57, 59, 61

Coin Board
254/00024/00 21

Coin Box
254/CA000/699 13
254/CSA00/753 ..... 25, 27
254/CSA01/435 5

Coin Meter
209/00305/00 ..... 25, 27

Coin Vault
254/TU009/225 ..... 25, 27

Complete Front Panel
254/CSA01/423 11
254/CSA01/510 11

Complete Side Insulation
254/CSA01/425 5
254/CSA01/512 5

Connection Pipe
254/GA000/760 67
254/GSA00/508 69
254/GSA00/509 69

Connector
254/00038/00 ..... 67, 69

Contact
209/00099/05 13

Contact Switch
209/00099/06 13

N/A items do not appear in index.

© Copyright, Alliance Laundry Systems LLC – DO NOT COPY or TRANSMIT

Contactor
254/EA000/685 ..... 63, 65
254/00022/00 65
254/00023/00 65

Control Board
254/00024/00 25
254/00030/00 21
254/00066/00 ..... 23, 27
254/00067/00 ..... 23, 27
254/00070/00 ..... 29, 31, 33

Control Label
254/00018/00 ..... 31, 33

Cordlock
211/00097/00 65
211/00117/00 63
720/00094/02 ..... 63, 65

Cover Plate
254/CA011/546 5
254/CA011/936 41

D

Door
254/00010/00 15
258/TU150/760 17

Door Fender
254/CA000/828 19
254/CA000/833 19
254/CA000/838 19
254/CA000/839 19

Door Gasket
254/MD000/359 15

Door Glass
254/00011/00 15
258/TU151/070 17

Door Glass Holder
254/00010/01 15

Door Hinge
254/00013/00 15
258/TU150/730 17

Door Trim
254/CA000/645 19
254/CA000/646 19
254/CA000/647 19
254/CA000/697 19

Draught Band
254/CA013/098 11
254/TU002/853 ..... 11, 19

Drum
254/CSA00/845 35
254/CSA00/847 37
254/CSA00/848 39
254/CSA00/849 39
254/CSA01/540 39
254/CSA01/591 39

Duct
254/SB000/867 ..... 63, 65
254/SB000/868 ..... 21, 23, 25, 27, 29, 31, 33, 63, 65, 71

Dust Cover
254/DA000/460 ..... 57, 59

Dust Filter
254/CA011/931 5
254/CA011/956 5
254/CSA01/528 5
254/CSA01/545 5

E

Elbow
254/39050/105 ..... 67, 69

Electrode
257/GA011/003 69

Eprom
209/00266/01 ..... 29, 31, 33

F

Fan
254/DSA00/772 ..... 55, 57, 59
254/DSA00/773 ..... 55, 57, 59

Fender
254/CA000/655 19

Fender Panel
254/CA000/856 11
254/CA000/857 11
254/CA000/858 11

Frame and Side Panels
254/CSA50/037 5
254/CSA50/045 5
254/CSA50/050 5
254/CSA50/052 5

Front Panel
254/CSA01/097 19
254/CSA01/098 19
254/CSA01/099 19
254/CSA01/383 19
254/CSA01/387 19
254/CSA01/408 11
254/CSA01/416 11
254/CSA01/424 11
254/CSA01/429 19
254/CSA01/511 11
254/CSA01/516 19
254/CSA01/593 19

Front Plate
254/CA011/265 ..... 25, 27

Fuse
209/00506/00 ..... 21, 23, 25, 27
209/00507/00 ..... 29, 31, 33
254/EA000/457 65
254/EA000/683 65

Fuse Holder
254/EA000/460 65
254/EA000/682 65

G

Gas Ignition
254/GA011/002 67

Gas Orifice
254/GA761/078 69
254/GA761/081 67
254/GA761/086 67
254/GA761/089 69
254/GA761/120 67
254/GA761/129 67

N/A items do not appear in index.

© Copyright, Alliance Laundry Systems LLC – DO NOT COPY or TRANSMIT

254/GA761/140 69
254/GA761/147 67
254/GA761/157 69

Gas Pipe
254/CA011/818 ..... 67, 69
254/FG000/274 67
254/GA000/746 ..... 67, 69
254/OP000/296 69
254/OP000/308 ..... 67, 69
254/TU004/601 69
254/TU007/358 69
254/TU013/217 67

Gas Reducer
254/CA013/099 69

Gas Valve
254/GA000/770 ..... 67, 69
254/LB000/020 67
254/OP000/290 67

Gasket
258/MD003/600 17
258/TU151/080 17

H

Heating Cover
254/ESA00/610 71

Heating Element
254/EA000/472 71

I

Idler Shaft
254/DA011/711 ..... 51, 53

Ignition Module
254/GA011/007 63

Inspection Hole
254/CA010/541 ..... 67, 69

Insulation Panel
254/CA000/675 13
254/CA000/676 13
254/CA011/929 19
254/CA011/930 19
254/CA012/029 19
254/CA013/131 19
254/CSA01/426 13
254/CSA01/432 13
254/CSA01/513 13
254/CSA01/523 13

J

Jumper
254/EA010/417 71
254/ESA00/843 ..... 63, 65

K

Key
254/DA011/914 49
254/LA000/119 ..... 11, 19
254/SB000/971 11
254/TUD00/187 ..... 51, 53
254/TU005/881 ..... 45, 47

Keypad Label
254/00015/00 21
254/00033/00 ..... 25, 27
254/00069/00 23

L

Leveling Leg
254/TU003/211 5

Lint Filter
254/CSA00/817 5
254/CSA00/839 5

Lock
254/LA000/121 ..... 11, 19
254/LA000/401 ..... 25, 27
254/LA011/941 11
254/TU002/876 13

Lock Hatch
254/LA011/359 19

Lock Hatch Assembly
254/LA000/123 19
254/LA000/124 19

Lower Drum
254/CA011/934 5
254/CA011/955 5

M

Magnetic Switch Holder
254/00017/00 13

Microswitch
254/EA000/650 5

Motor
254/DA011/909 61

Motor Assembly
254/DA000/424 ..... 55, 57
254/DA000/428 ..... 55, 57
254/DA011/907 ..... 57, 59

Motor Plate Assembly
254/DSA00/703 55
254/DSA00/704 55
254/DSA00/793 ..... 57, 59
254/DSA00/799 ..... 57, 59
254/DSA00/801 57

Mounting Bracket
254/CA011/866 51

Mounting Plate
254/CA011/935 ..... 63, 65
254/00044/00 61
254/00045/00 61

Mushroom Pushbutton
209/00248/00 13

N

Noise Suppressor
209/00356/00 65

Nut
204/00007/00 ..... 63, 65

N/A items do not appear in index.

© Copyright, Alliance Laundry Systems LLC – DO NOT COPY or TRANSMIT

204/00008/00 ..... 25, 27
204/0007/00 9
254/C0000/249 ..... 35, 37, 39, 45, 47, 49, 51, 53
254/SB000/813 ..... 55, 57, 59
254/TUD00/367 ..... 23, 27, 33
254/TU002/842 ..... 21, 23, 25, 27, 29, 31, 33, 71
254/TU003/266 ..... 7, 9, 67, 69
254/TU003/400 ..... 7, 9
254/TU004/787 ..... 39, 45, 47, 49, 51, 55, 57, 59
258/TU484/000 17

O

Operating Door
254/CSA01/529 ..... 21, 23
254/CSA01/530 ..... 25, 27
254/CSA01/535 ..... 29, 31, 33

Operating Touchpad
254/00021/00 ..... 21, 23
254/00039/00 ..... 29, 33

P

Panel
254/CA012/073 ..... 5, 41
254/CA013/027 ..... 5, 41
254/CSA01/380 13
254/CSA01/392 13
254/CSA01/406 13
254/CSA01/414 13
254/CSA01/427 13
254/CSA01/433 13
254/CSA01/514 13
254/CSA01/524 13

Plate Assembly
254/CA012/059 53
254/CA013/067 7
254/EA010/714 71
254/EA011/613 71
254/00048/00 11
254/00062/00 9

Protector
209/00284/00 ..... 59, 63, 65

Pulley
254/DA000/508 55
254/DA000/509 ..... 55, 57
254/DA000/510 55
254/DA000/512 61
254/DA000/516 ..... 55, 57
254/DA000/528 53
254/DA000/529 53
254/DA000/530 ..... 51, 53
254/DA000/531 ..... 51, 53
254/DA011/906 61
254/DA011/913 61
254/DA011/919 57
254/TU014/689 57
254/TU014/690 61
54/DA000/513 61

Pulley Housing
254/DA000/517 ..... 51, 53

R

Rail
254/EA000/550 65
720/00110/01 ..... 63, 65

Reed Switch Assembly
254/ESA00/862 13

Reed Switch Magnet
254/MD000/337 15
254/MD000/377 17

Reinforcement Bracket
254/CA010/355 35
254/00050/00 ..... 37, 39

Relay
254/EA000/647 ..... 63, 65
254/EA000/651 63

Rivet
254/TU003/213 13

Rotation Sensor
254/TU014/414 33

S

Safety Thermostat
254/EA000/243 71
254/EA000/245 ..... 67, 69

Screw
207/0004/00 9
207/00108/00 ..... 25, 27
254/M0000/262 ..... 7, 67, 69
254/P0000/219 15
254/SB000/835 ..... 35, 37, 39
254/SB000/836 ..... 21, 23, 25, 27, 29, 31, 33, 55, 57, 59, 63, 65
254/SB000/924 13
254/SB000/936 11
254/SB000/949 19
254/SB000/951 11
254/SB000/952 ..... 7, 9
254/SB000/955 43
254/SB000/967 15
254/SB000/975 13
254/TU002/793 ..... 63, 67, 69
254/TU007/733 ..... 5, 7, 9, 11, 13, 19, 25, 27, 29, 31, 33, 41, 43, 63, 65, 67, 69, 71, 73
254/00049/00 15
258/CA123/180 17
258/SB009/210 17

Shim
154/00002/06 39

Side Panel
254/CSA50/035 ..... 5, 41
254/CSA50/036 ..... 5, 41

Spacer
254/TU014/01 33
254/TU014/701 ..... 23, 27

Standoff
211/00120/00 ..... 63, 65

Steam Battery
254/00027/00 73
254/00028/00 73
254/00029/00 73

Steam Valve
209/00185/00 73

N/A items do not appear in index.

© Copyright, Alliance Laundry Systems LLC – DO NOT COPY or TRANSMIT

Support Bracket
254/00037/00 73
254/00046/00 73
254/00047/00 73

Switch Assembly Plate
254/SB000/954 43

T

Telem
254/00036/00 ..... 59, 63, 65

Telem Sticker
209/00520/00 13

Temperature and Humidity Sensor
254/00007/00 7
254/00008/00 7
254/00009/00 7
254/00058/00 9
254/00059/00 9
254/00071/10 9

Temperature Switch
254/EA000/594 ..... 7, 9

Terminal
254/EA000/466 ..... 41, 63, 65

Terminal Block
254/EA000/467 63

Thermostat
254/CA011/028 ..... 67, 69

Thermostat/Hygrometer Protection
254/00063/00 9

Timer
254/00043/00 ..... 21, 25

Top Drum
254/CA011/932 5
254/CA011/933 5

Top Panel
254/CA011/925 5
254/CA011/987 5

Top Plate Assembly
254/00061/00 9

Transformer
254/ESA00/857 ..... 63, 65

Trunnion
254/CSA00/823 35
254/CSA01/434 37

Trunnion Assembly
254/CSA00/729 39
254/CSA00/822 39

Tube Connector
254/EA000/211 ..... 43, 55, 57, 59, 61
254/EA000/212 43
254/EA000/648 ..... 55, 57, 59, 61

Tubing
254/EA000/234 43

V

Valve
254/CSA01/284 41

Vent Pipe
254/CSA00/971 41

W

Washer
203/00006/00 ..... 9, 63, 65
203/00007/00 ..... 25, 27
254/AT000/368 ..... 67, 69
254/IB000/140 ..... 45, 47, 49, 51, 55, 57, 59, 61
254/SB000/843 ..... 35, 37, 39
254/SB000/847 ..... 55, 57, 59
254/SB000/852 ..... 15, 17
254/SB000/853 ..... 67, 69
254/SB000/938 13
254/TU002/814 ..... 35, 37, 39, 45, 51, 53, 55, 57, 59, 61, 67
254/TU002/846 5
254/TU002/847 5
254/TU011/613 ..... 21, 23, 25, 27, 29, 31, 33, 67, 69, 71
254/VSB00/130 ..... 35, 37, 45, 51, 53, 69, 71
254/VSB00/134 ..... 45, 47, 49, 51, 55, 57, 59, 61

Wiring Clip
254/EA000/395 ..... 21, 23, 25, 27, 29, 31, 33

Wiring Rod
254/SB000/876 ..... 45, 47, 49

N/A items do not appear in index.

© Copyright, Alliance Laundry Systems LLC – DO NOT COPY or TRANSMIT

Notes

© Copyright, Alliance Laundry Systems LLC – DO NOT COPY or TRANSMIT